AIAA 92-3692

Application of the Integrated Modular Engine (IME) to Space Vehicle Concepts

John M. Cramer
NASA- Marshall Space Flight Center
Huntsville, AL

and

Michael E. Wakefield
Martin Marietta Astronautics Group
Littleton, CO

AIAA/SAE/ASME/ASEE
28th Joint Propulsion Conference and Exhibit
July 6-8, 1992 / Nashville, TN

For permission to copy or republish, contact the American Institute of Aeronautics and Astronautics
370 L'Enfant Promenade, S.W., Washington, D.C. 20024

APPLICATION OF THE INTEGRATED MODULAR ENGINE (IME) TO SPACE VEHICLE CONCEPTS

John M. Cramer*
NASA- Marshall Space Flight Center
Huntsville, AL
and
Michael E. Wakefield**
Martin Marietta Astronautics Group
Littleton, CO

Abstract

The incorporation of integrated modular engines (IME) in space vehicles offers attractive benefits which include improved system reliability and fault tolerance; increased I_{sp} and thrust/weight ratio; and improved operability and maintainability. This paper summarizes a study that was performed to define concepts for three cryogenic space vehicles incorporating the IME: a trans-lunar injection stage, a lunar lander, and an upper stage for a launch vehicle. The goals of the study were to quantify potential IME benefits, identify issues that must be addressed, and define the technical and programmatic actions required to develop the IME.

Nomenclature

ETO	Earth-to-Orbit
H_2O_2	Hydrogen Peroxide
I_{sp}	Specific Impulse
LEO	Low Earth Orbit
LF_2	Liquid Fluorine
LH_2	Liquid Hydrogen
LOX	Liquid Oxygen
N_2O_4	Nitrogen Tetroxide
TVC	Thrust Vector Control

Introduction

While a detailed discussion of the IME concept may be found in references 1 and 2, a brief introduction is provided here. The fundamental idea behind the IME concept is to integrate the propulsion elements into one operating unit (Escher's unitary engine). In other words, the IME is a system of multiple components operating in parallel. As Figure 1 illustrates, a large number of configuration options are available, even when only the turbomachinery and the combustion chambers are considered.

One key advantage to a parallel component configuration is the ability of the system to accommodate component failures. A component failure in a conventional multi-engine configuration results in the shutdown of the affected engine, and in some proposed vehicles the shutdown of an opposing engine to maintain centerline thrust. This approach results in a vehicle carrying healthy, but useless components (dead weight), and operating at an off-nominal thrust level (performance loss).

The IME on the other hand, would have the ability to detect incipient component failure and isolate the faulty component from the rest of the system.

---

* Aerospace Engineer, Member AIAA

** Manager, Space Transfer Vehicle Subsystems, Member AIAA

Copyright © 1992 by the American Institute of Aeronautics and Astronautics, Inc. No copyright is asserted in the United States under Title 17, U.S. Code. The U.S. Government has a royalty-free license to exercise all rights under the copyright claimed herein for Governmental purposes. All other rights are reserved by the copyright owner.

The components' normal operating point would be below their design point. Therefore, the remaining healthy components would have the ability to ramp up to pick up the load from the isolated component. The IME-based system would continue to operate at or near its design thrust with no healthy components shut down.

The IME concept offers other benefits besides these potential improvements in system reliability and fault tolerance. The integrated system design may also offer increased performance (higher I_{sp} or thrust/weight ratio), improved operability (easier access, modular checkout and replacement), and lower cost (development, testing, integration, and checkout).

Background

Previous Work

Aeroplug/Aerospike Engines One important source for the current IME concepts is the extensive database for aeroplug/aerospike engines developed between 1956 and 1977.[3] This body of work included design studies and comprehensive testing of components and systems. Many applications were envisioned in these programs, ranging from orbital transfer vehicles with 25,000 pounds of thrust to boosters with 30 million pounds of thrust. Hot-fire testing included several system breadboards with thrust levels between 300 and 250,000 pounds of thrust. Several propellant combinations were tested including H_2O_2, LOX/RP-1, LOX/LH_2, LF_2/LH_2, and N_2O_4/Aerozine-50.

This database lays the foundation for several key IME characteristics, including: the manifolding, ignition, and control of multiple thrust chambers; the ability to perform thrust vector control by differential throttling of chambers; and, possibly, the use of a plug nozzle as a highly efficient expansion surface.

Space Transfer Vehicle Studies NASA has been developing conceptual designs of cryogenic orbital transfer vehicles for several years (reference 4-5). Recent studies of this class of vehicles (reference 6) applied the IME to address some mission-unique characteristics. Specifically, an IME was proposed for a vehicle configuration that used an aerobrake for Earth orbit capture. The proposed design used the aerobrake as the expansion surface for the engine. While this aerobrake concept was later abandoned, it rekindled discussion about the IME and its potential application to space vehicles.

Operational Efficiency Studies A recent study examined ways of reducing the recurring operations costs for launch vehicles (reference 7). Historically, the propulsion system is one of the most expensive vehicle systems to prepare and maintain for flight. Therefore, the study concentrated on reducing the parts count of the propulsion system, simplifying vehicle-to-propulsion system interfaces, and eliminating operations problem areas (e.g., hydraulic systems). The resulting configuration was an IME that its designers predict would be simpler, lighter, more reliable, and more operable than a conventional propulsion system.

Reliability Studies Several activities in recent years have attempted to analyze the failure history of propulsion systems, and to assess the impact this data may have on new designs.[8,9] While this work has not been directed specifically at IME applications, some of the conclusions reinforce the IME philosophy. For instance, one of the lessons learned from reference 9 states:

Propulsion failures have been the major cause of launch failures and the preponderance of those have been benign failures, i.e., the engine has failed to provide the required thrust without failing catastrophically. Accordingly, the largest single reduction in failure probabilities for such vehicles could be achieved by designing for engine segment-out capabilities to meet mission requirements.

IME proponents argue that "component-out capability" would be even more effective than "engine segment-out capabilities."

Long Range Plan

While all of these activities support the basic IME concept, a process for bringing an IME for cryogenic space vehicle applications to reality is lacking. In order to focus the efforts in this area, a long range plan for the IME has been proposed that ultimately results in the development and flight qualification of an IME system. Early steps in this process include: an assessment of the potential benefits of an IME used on a space vehicle; the development of analytical tools to address IME-unique technical issues; a detailed IME system design effort; component and subsystem technology development testing; and an IME system test bed demonstration.

The initial IME benefits study has been performed over the past several months. The results of that study are presented in the remainder of this paper.

IME Assessment Study

Study Introduction

In an effort to quantify the potential benefits of the IME, three diverse space vehicle concepts were selected for assessment. These vehicles were a trans-lunar injection (TLI) stage, a lunar lander, and a launch vehicle upper stage. All three vehicles operate on cryogenic propellants (LOX/LH_2). Baseline vehicle designs existed for all three vehicles from other studies. The intent was to redesign these vehicles with an IME, while keeping the mission requirements constant. IME benefits would be obtained by comparing the characteristics (e.g., payload capability, reliability, etc.) of the baseline and the reconfigured vehicles.

Figure 2 depicts the three vehicles and summarizes their baseline propulsion system characteristics. Propulsion system thrust levels ranged from 20,800 to 175,000 pounds. All of the conventional engines were originally RL10 derivatives with single engine thrust varying from 20,800 to 35,000 pounds.

TLI Stage

Baseline Configuration The TLI stage concept selected as a baseline was developed under an STV study contract[10] as one possible solution to transporting a lunar lander with crew or cargo to the moon. This approach assumed that a 70 tonne launch vehicle would be used for the ETO phase. Two launches are required to place the TLI stage and the lander stage into LEO, where the two elements rendezvous and dock. Approximately half of the TLI propellant is used for a suborbital burn to reach LEO. The TLI stage is 27.5 feet in diameter, 70 feet long, and weighs 228 tonnes (213 tonnes of propellants). The baseline vehicle is powered by five RL10-C engines, arranged in a circular mounting pattern, with a total thrust of 175,000 pounds.

IME Configuration The IME configuration selected for the TLI stage is a plug cluster engine that uses the aft propellant dome of the LH_2 tank as the final expansion surface. The resulting area ratio of 900 yields an I_{sp} of 473 seconds at a chamber pressure of 1500 psia.

As depicted in Figure 3, several modular elements make up the engine. One of these elements is a set of eight combustors (with a 30:1 expansion ratio) assembled into a unit that also includes high pressure propellent manifolds and the support structure. Eight of these modules, with a total of 64 combustors, are required to make a complete circle. There are also four turbomachinery modules, which consist of a LOX turbopump, an LH_2 turbopump, a gas generator, and the associated isolation valves. Finally, connecting modules, consisting of valves and flexible sections, join the other elements together. Figure 4, a sectional view of the IME installed on the TLI stage, shows the layout of the feedlines, engine manifolds, combustors, turbomachinery, and conical expansion surface.

The gas generator (GG) cycle was selected for the IME over the various expander cycles and the staged combustion cycle. The primary reasons for this selection include the GG's relatively simple plumbing, the ability to package its components in independent modules, and its positive start capability. The ability to use GG exhaust gases to provide roll control is an additional benefit.

One reason for selecting the TLI stage for this study was to assess one of the potential benefits of an IME, namely, the use of an existing vehicle surface for rocket engine plume expansion. It was thought this approach would reduce the weight of the engine, since the vehicle surface would exist anyway. The resulting thrust/weight ratio for the IME was in fact higher than that of a conventional system (31 vs. 22.4).

With a 27.5 foot diameter tank, the aft dome appeared to be the appropriate surface to use for expansion. The plug nozzle and the expansion-deflection (E-D) nozzle were selected as two shapes that could best utilize this available surface. Analyses showed that the weights of various concave hydrogen tank domes (3400-6800 pounds) were much heavier than corresponding convex domes (1100-2600 pounds). This weight difference, which was due to compressive loads and a longer barrel section for the concave dome, was one factor in selecting the plug nozzle over the E-D.

A trade was then performed to select the cone angle of the plug. Nozzle efficiency, interstage weight, dome weight, barrel weight, and insulation weight were all considered. A cone angle of 45° was selected since it provided the highest net payload gain.

A significant technical issue that arises from using the tank dome as an expansion surface is the requirement to provide thermal protection. The outer surface of the LH_2 tank would experience temperatures between 900 and 2300 °F when the engine is operating. The thermal protection system must also minimize liquid hydrogen boiloff losses for a significant time in space between engine firings. For the selected stage a LEO stay time of up to two months, with a boiloff limit of 5% of the total LH_2 mass, was the design requirement.

The selected thermal protection system was a multilayer insulation (MLI) system. The outer surface would be constructed of a carbon/silicon carbide jacket, 0.068 inch thick. The outer 23 layers of MLI would be made from titanium sheet, and the inner 11 layers of MLI from conventional aluminized Mylar™. The innermost layer of insulation would be BX-250™ spray on foam insulation (SOFI).

The insulation performance calculations predict 364 Btu/ft^2-hr for the engine firing condition and 0.149 Btu/ft^2-hr for the on-orbit storage condition. Both of these values are reasonable for the application.

Although a proposed insulation system has been analyzed, this area would require significant technology development. No existing insulation system has experienced the wide range of requirements that this system would encounter.

Configuration Comparison To make the comparison between the conventional and the IME concepts meaningful, the thrust, tank volumes, propellant mass, and mission profile were held constant. Figure 5 depicts the two configurations side by side.

Figure 6 provides a top level comparison of the characteristics of the two configurations. During a nominal mission profile the IME delivers slightly more payload than the baseline (3.4%). The conventional system, however, has a higher reliability than the IME, primarily because of the large number of combustors (64) on the IME.

Both systems are two fault tolerant, but the IME is a much more capable system after failures. This effect is illustrated in Figure 7. After one failure the conventional system only produces 140,000 pounds of thrust, while the IME maintains full thrust. Gravity losses at the reduced thrust level decrease the payload capability of the conventional system by 15,000 pounds. After two failures the IME's worst case thrust level is still higher than that of the conventional system (110,000 pounds vs. 105,000 pounds). The vehicle's payload capability would be based on worst case conditions rather than the nominal conditions. The IME therefore, would provide a 13 percent improvement in payload capacity over the baseline (129,000 pounds vs. 114,000 pounds).

Another benefit of this IME concept is the elimination of the engine gimballing hardware. Differential throttling of the combustor segments can provide an effective thrust vector control angle of at least 2 degrees.

Lunar Lander

Baseline Configuration The baseline lunar lander was developed under the same STV contract as the TLI stage.[10] It is a large lander (compared to Apollo) having a maximum landing weight of 29.2 tonnes. It is powered by 5 modified RL10 engines arranged in a cross pattern with one engine in the center. It was assumed that these RL10 engines could be modified to provide the throttling necessary for landing, in this case 80% of hover thrust. The propulsion system was designed to tolerate failure of any two engines and still accomplish the mission while maintaining centerline engine thrust. Two random engine failures could be in the outer engines, requiring the two opposite engines to be shut down. The center engine would then have to provide all the thrust. This design approach leads to a propulsion system that has much more thrust available than it would otherwise need.

IME Configuration When the thrust for the lander version of the IME was determined, the inefficiency in the baseline design was noted, and steps were taken to alleviate that condition. For a 4 turbopump, 8 combustor segment (minimum) IME, the worst case two-fault situation resulted in a thrust reduction of 37 percent. Since the lander propellant weight and tank size were designed to the worst case condition, the approach selected was to match the IME two-fault thrust level to the conventional two engine-out condition. This resulted in an IME design thrust of 33,000 pounds, compared to 104,000 pounds for the conventional engine configuration.

The configuration selected for the IME on the lunar lander is a plug cluster with 16 combustors and 4 turbomachinery sets. Like the TLI engine, it is a gas generator cycle, operating at 1500 psia chamber pressure.

The combustor outlets are near rectilinear, 13.3 by 1.5 inches, exhausting to a severely truncated plug (10% isentropic length) made from carbon/silicone carbide. The combustor area ratio has been set at 30:1, to eliminate the requirement to cool the plug. A view of the lander with the IME engine installed is shown in Figure 8.

Configuration Comparison Figure 9 compares the characteristics of the conventional and IME landers. The mass in lunar orbit and the descent trajectory were held constant for these two configurations.

The reliability and fault tolerance of these two vehicles are essentially equal. The primary difference in this category is the previously described reduction in total thrust for the IME.

While the IME lander shows only a slight increase in payload (2%), this value is conservative. The stated payload gain for the IME is based solely on the decreased propellant load resulting from its higher Isp. The IME lander should be redesigned to take advantage of its smaller propellant load, and its lower center of gravity because of the plug nozzle. Expected areas for weight reduction include the landing legs, propellent tanks, and payload unloading mechanisms.

As previously mentioned, the IME approach allows the total thrust of the vehicle to be greatly reduced (from 104,000 pounds to 33,000 pounds). This feature has a significant impact on the engine throttle requirement. While the conventional system requires a throttle ratio of 12:1 (cargo missions) or 17:1 (piloted missions), the IME only requires throttling of 4:1 (cargo) or 5:1 (piloted). The development of an engine with 17:1 throttling will be a much more difficult task than developing one at 5:1.[11]

Based on Apollo and Mars Viking experience, the exhaust plume impingement pressure has a significant effect on the soil as a lander approaches the surface. This pressure can cause dust and debris to be thrown hundreds or even possibly thousands of feet. This effect is a concern for a lunar exploration mission where a permanent base would be located near the landing site. The impingement pressures generated are a function of the size of the the landing vehicle, so the large vehicle being contemplated for lunar exploration are a cause for concern. There is also a concern that if the impingement pressures are high enough (somewhere between 1 and 2 psi, depending on soil conditions), the exhaust plume will penetrate the soil, "fluidize" the soil particles, and dig a crater, rather than just blow away the top surface particles. If this occurs during landing, the vehicle could dig a hole for itself and come to rest in an unacceptable position.

Estimates of the expected impingement pressures have been calculated for the two landers. The low pressure of the IME lander (0.3 psia) is due primarily to its high expansion ratio. The conventional lander's pressure (1.3 psia) is higher than that of the Apollo missions (1.0), where evidence of vision impairing dust and flying debris were reported.

Upper Stage

The Air Force is currently assessing IME concepts for upper stages.[12,13] Rather than duplicate their work, this study selected one of their configurations and expanded the analysis in certain areas. A more detailed discussion of these concepts may be found in the cited references.

Baseline Configuration The baseline selected for evaluation of IME application is an upper stage proposed by the Air Force for use with the NLS-3 vehicle (20,000 pounds to LEO). This upper stage is 15 feet in diameter, 30 feet long, and powered by a single RL10A-4 with an I_{sp} of 449 seconds. This stage

was underpowered at the outset, and provided only 16,000 pounds to LEO from an NLS-3 vehicle, rather than the 20,000 pounds desired. By providing a higher thrust to reduce gravity losses, together with an increased I_{sp}, the payload improved dramatically. A minimum thrust of 27,500 pounds was required to achieve the 20,000 pound payload, so a thrust of 30,000 pounds was selected for the IME replacement engine. The Air Force is also considering an RL10-C engine, which would have approximately 35,000 pounds of thrust. The criteria for engine replacement in this case was that the IME must mate with the existing interfaces, to allow engine interchangeability on the same stage.

IME Configuration The IME engine selected is a GG cycle with an expansion-deflection (E-D) nozzle (Figure 10). It has 16 combustors directed along the inside surface of the deflection bell, each combustor having a 1500 psia chamber pressure and a 16:1 expansion ratio prior to exhausting into the large bell. The engine develops 473 seconds of I_{sp} compared to 449 seconds for the reference engine. The engine has two turbomachinery assemblies, and it is designed to operate at 100% of full thrust in the event that either of the turbomachinery sets fails. A gas generator is included with each set of turbomachinery. The exhaust of the gas generators is used to cool the inside surface of the expansion bell just downstream of the combustors.

Configuration Comparison Figure 11 compares the conventional and the IME configurations. In this case the propellant mass and the mission profile were held constant.

The reliability of the IME, since it is one failure tolerant, is significantly higher than the conventional engine (0.9996 vs. 0.9987). One interesting feature of this engine is the normally open pyrotechnic valves at the propellant inlet to each combustor. These valves allow isolation of a combustor if necessary, but otherwise remain passive and don't become a reliability driver as would conventional valves.

Conclusions

The IME configurations developed in this study showed significant potential benefits. Some of these benefits apply across the three concepts. For instance, the ability to cross strap engine components is an inherent benefit of the IME. The ability to perform thrust vector control by differential throttling instead of gimballing is another such benefit. Finally, the shorter engine length of the IME reduces vehicle weight by decreasing the interstage length or lowering the center of gravity.

Each of the three IME applications had unique benefits as well. For the TLI stage, the improved thrust at the two fault condition provided a significant payload improvement. The lunar lander IME requires significantly less throttling capability, and its impingement pressure on the lunar surface is reduced. The IME for the upper stage provided fault tolerance where none existed in the baseline.

All three applications use a gas generator cycle operating at a chamber pressure of 1500 psia. The modular aspect of the IME can be exploited to reduce engine development cost for several applications. For instance a universal thrust chamber could be developed to meet the needs of the three vehicles studied. Once the chamber is developed, other applications could develop a propulsion system using the appropriate number of these chambers. A similar philosophy with the other IME components could significantly reduce engine development costs in the future.

Recommendations

This study has shown that the IME concept offers attractive benefits for space vehicle applications. It is recommended that a more detailed design effort and an IME technology program be pursued.

The design effort should include hardware design and an improved reliability assessment. This study was only able to perform a first level design of the IME. A more detailed design should be done to select the size and number of components, develop detailed system layouts, and perform a failure modes and effects analysis. Reliability areas requiring improvement include the understanding of the coverage factor (the probability of successfully detecting a failure), the correlation factor (the probability of one failure causing another one), and the reliability of individual components (the effects of size, pressure, production techniques, etc.).

Given the limited resources available in the propulsion research field today, a technology program should be structured that addresses the IME-unique issues, while taking advantage of ongoing generic propulsion work. Hardware, analyses, and techniques from other programs should be leveraged whenever possible.

Specific IME-related technology areas to be addressed include developing and characterizing a "universal" thrust chamber; testing a multi-chamber cluster to study ignition, transient, and expansion issues; updating the database for unconventional nozzles (i.e., plug and E-D) by applying analytical techniques that were not available 20-30 years ago; assessing the propellant flow issues introduced by manifolding components; and developing a health management database that includes component failure signatures, and reconfiguration algorithms.

Finally, this study has revealed concerns about engine exhaust impingement pressures near the lunar surface. Whether or not the IME concept is pursued, a more detailed analysis of this issue should be performed. Depending on the results of this analysis, a test program to characterize the problems associated with debris and dust may be appropriate.

Acknowledgements

The authors extend their thanks to the following individuals who made significant contributions to this study: Jim Greenwood (propulsion analysis), Ron Welborne (reliability assessment), Grady Romine (impingement pressure analysis), all of Martin Marietta Astronautics Group; and Wendel Burkhardt and Chuck O'Brien of Aerojet (propulsion analysis and design).

References

1) Escher, William J. D. "Supplanting the Conventional Wisdom N-Engine Propulsion System With a Networked-Subsystems Unitary Engine Approach." 1990 Conference on Advanced Earth-To-Orbit Propulsion Technology, Huntsville, AL, May 15-17, 1990.

2) Escher, William J. D.; Herr, Paul N.; and Stephenson, Frank W. "Ubiquitous Condition Monitoring: Key to Networked-Subsystem Space Propulsion Systems." Second Annual Conference on Health Monitoring for Space Propulsion Systems, Cincinnati, OH, November 14-15, 1990.

3) Ballard, R. O. "The Aerospike/ Aeroplug Engine: A Technology Development Summary." Sverdrup

Technology Inc.- MSFC Group, Contract NAS8-37814, 1991.

4) Davis, E. Orbital Transfer Vehicle Concept Definition and Systems Analysis Study, Final Report. Contract NAS8-36107, D180-29108-1 (Vol. 1), Boeing Aerospace Company, Seattle, WA, December 1986

5) Keeley, J.T. Orbital Transfer Vehicle Concept Definition and System Analysis Study, Final Report. Contract NAS8-36108, MCR-86-2601 (Vol. 1), Martin Marietta Astronautics Group, Denver, CO, July 1986.

6) Fox, E.; Wakefield, M.; Greenwood, J.; and McKinnis, J. "Plug Cluster Engines for the Next Generation of Space and Launch Vehicles." AIAA Paper 90-3710, AIAA Space Programs and Technologies Conference, Huntsville, AL, September 25-27, 1990.

7) Wong, G. S. ; Frericks, J. E. ; Fulton, D. L.; Ingle, W. B.; and Waldrop, G. S. "Operationally Efficient O2/H2 Propulsion Module for Advanced Launch Systems." AIAA Paper 90-2432, AIAA/ASME/SAE/ASEE, 26th Joint Propulsion Conference, Orlando, FL, July 16-18, 1990.

8) McFadden, Richard H., and Shen, Yu. "An Analysis of the Historical Reliability of US Liquid-Fuel Propulsion Systems." AIAA Paper 90-2713, AIAA/ASME/SAE/ASEE, 26th Joint Propulsion Conference, Orlando, FL, July 16-18, 1990.

9) Leonard, B. and Kisko, W. "Liquid Propulsion Considerations in Projecting Launch Vehicle Failure Probabilities." AIAA Paper 92-1334, AIAA Space Programs and Technologies Conference, Huntsville, AL, March 24-26, 1992.

10) Space Transfer Vehicle Study, Contract NAS8-37856, Martin Marietta. Presented at Space Transportation Week #3, MSFC, Huntsville, AL, August 21, 1991.

11) Limerick, C. "Component Design Concerns for Deep Throttling H_2/O_2 Rocket Engines." AIAA Paper 91-2209, AIAA/ASME/SAE/ASEE, 27th Joint Propulsion Conference, Sacramento, CA, June 24-26, 1991.

12) Pauckert, R. and Harmon, T. "Integrated Modular Engine For Upper Stage Propulsion." AIAA Paper 92-3693, AIAA/SAE/ASME/ASEE, 28th Joint Propulsion Conference, Nashville, TN, July 6-8, 1992.

13) Burkhardt, W. "Integrated Modular Engine Concepts For Space and Upper Stage Applications." AIAA Paper 92-3694, AIAA/SAE/ASME/ASEE, 28th Joint Propulsion Conference, Nashville, TN, July 6-8, 1992.

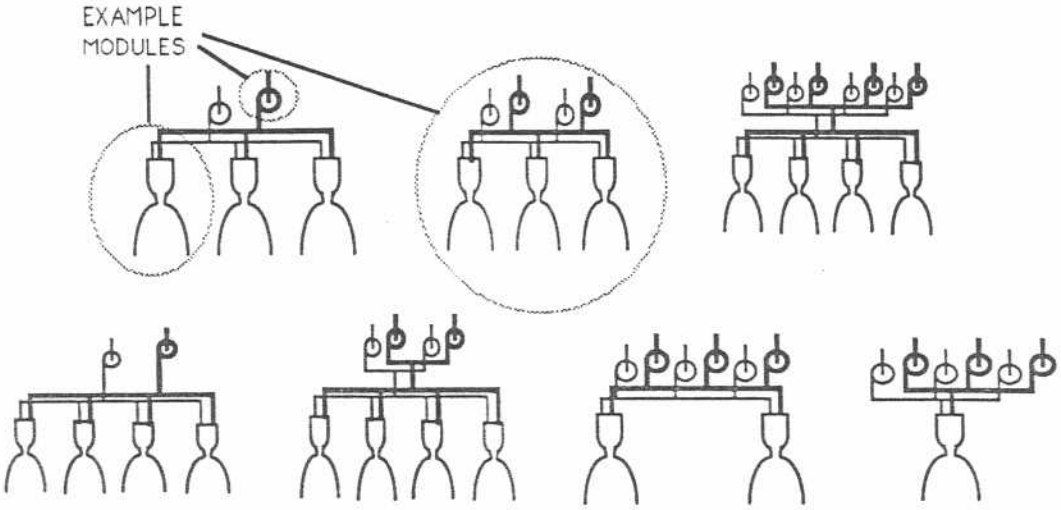

Figure 1- Examples of IME Combinations

	Vehicle	Characteristics	Data
Upper Stage	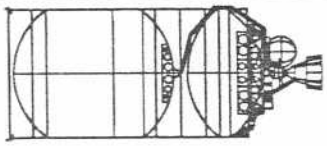 Proposed Air Force US for NLS 3 (20Kto LEO)	Stage Engine (1x) Engine Weight Total Thrust	RL10A-4 365 lb 20800 lbf
Lunar Mission	Lander 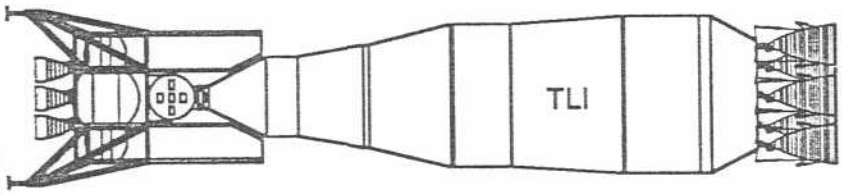 From TD-07, Rendevous and Docking Arch.	TLI Engine (5x) Engine Weight Total Thrust	RL10C - 1 800 lb 175,000 lbf
		Lander Eng. (5x) Engine Weight Total Thrust	RL10A - 4 365 lb 104,000 lbf

Figure 2- Baseline Vehicles and Propulsion System Characteristics

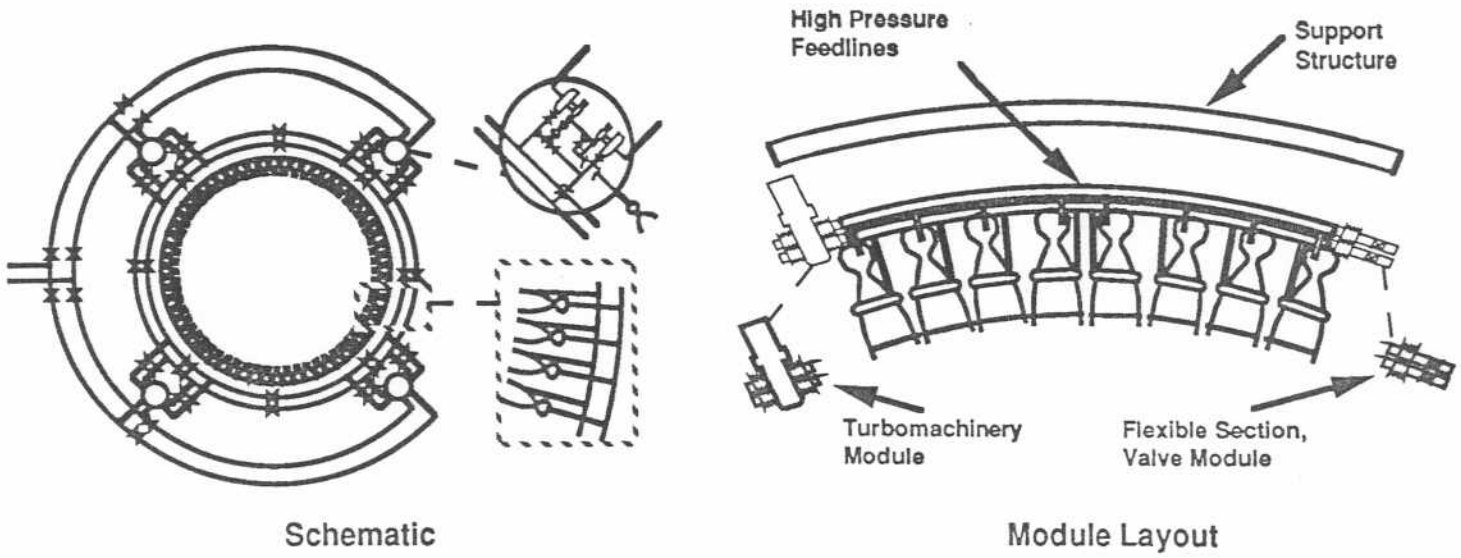

Figure 3- TLI IME Schematic and Module Layout

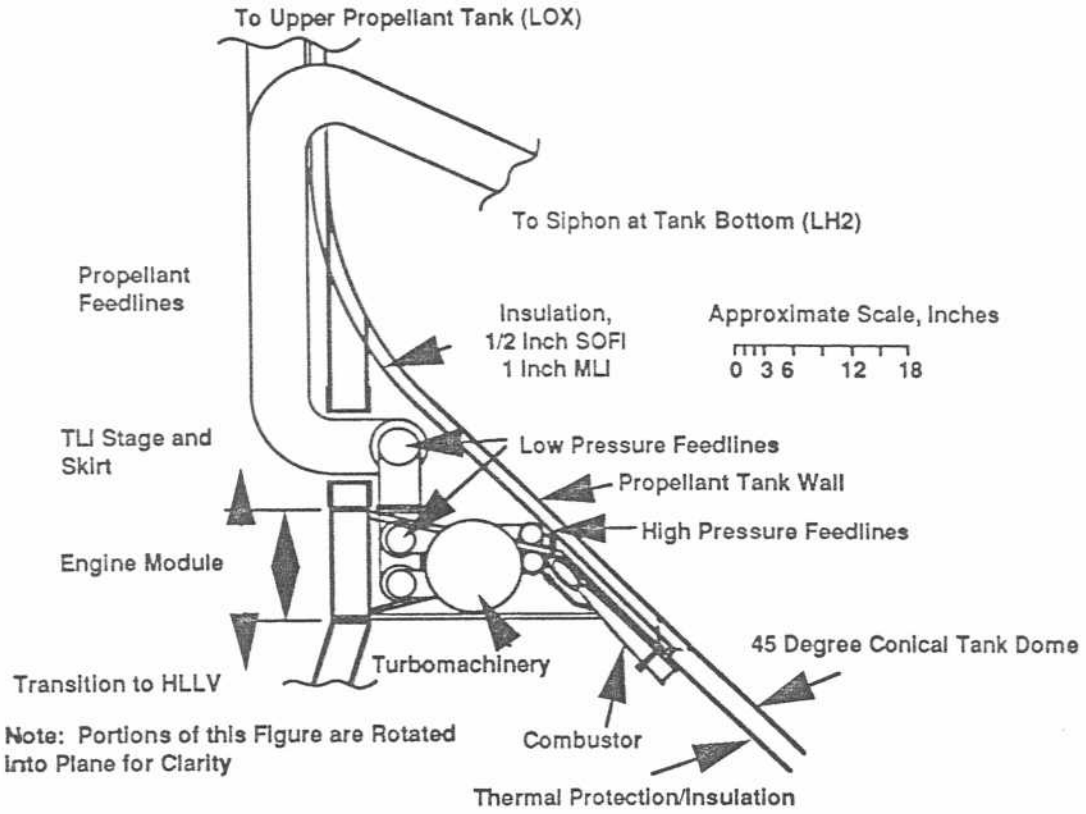

Figure 4- TLI IME Sectional View

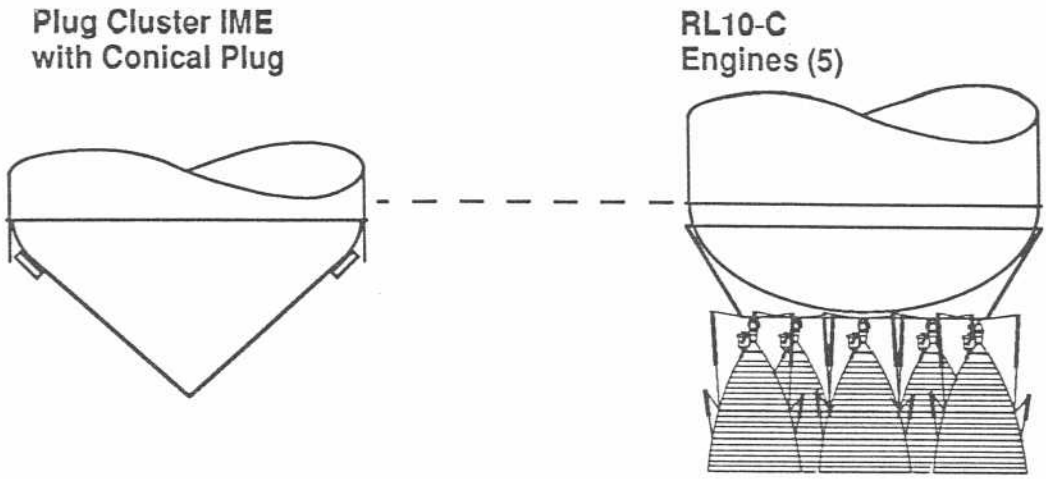

Figure 5- TLI Engine Comparison- IME and Conventional

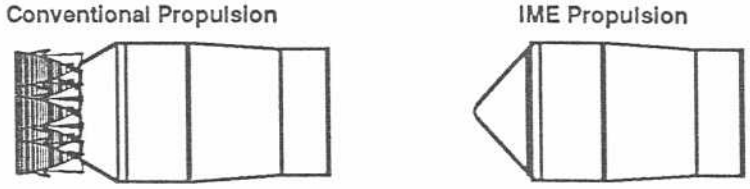

Baseline	Conventional Propulsion	IME Propulsion
Propellant Mass	470,000 lbm	470,000 lbm
Mission ΔV	10,300 ft/sec	10,300 ft/sec
Thrust	175,000 lbf	175,000 lbf

Characteristics	Conventional Propulsion (5 Engines, RL10C)	IME Propulsion (64 Combustors, 4 TPA's)	IME Discriminators
Safety	Dual Fault Tolerance	Dual Fault Tolerance +	Failure Thrust Higher
Reliability (Firings/Failure)	0.9994 (1667)	0.9988 (833)	Both Excellent, but IME More Recovery Options
Nominal Payload, Tonnes	70.2	72.6	+ 2.4 Tonnes
Isp, Seconds	468	473	+ 5 Sec
Health Monitoring	Could be Incorporated	Integral	VHM at Inception
Stage Length, Meters	18.3	16.2	- 2.1 Meters
Thrust Vector Control	Gimbals	Thrust Mod and GG Exh	Eliminate Gimbal System, Replaced with Avionics

Figure 6- Comparison of TLI Stage Characteristics

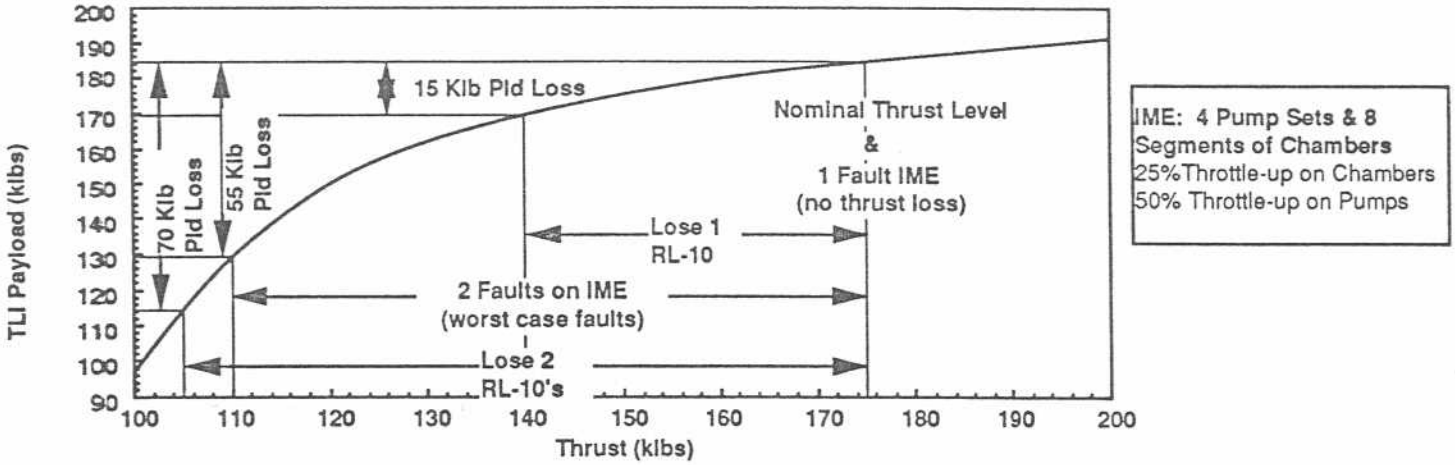

Figure 7- TLI Payload Capability

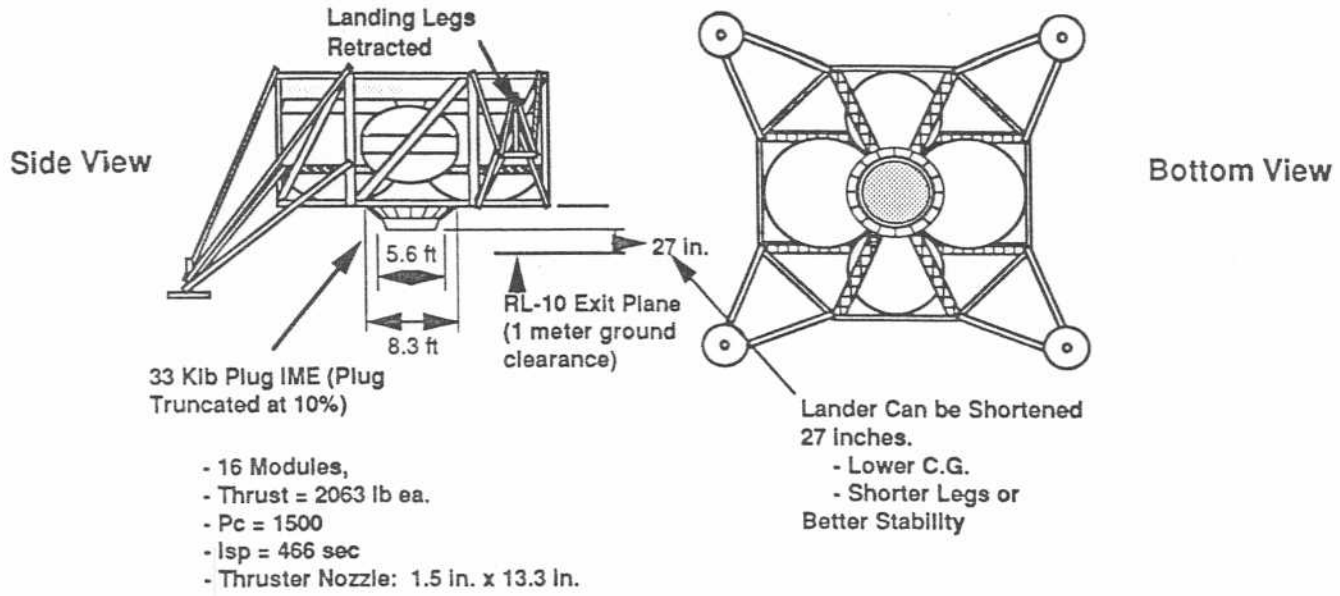

- 16 Modules,
- Thrust = 2063 lb ea.
- Pc = 1500
- Isp = 466 sec
- Thruster Nozzle: 1.5 in. x 13.3 in.

Figure 8- Lander IME Configuration

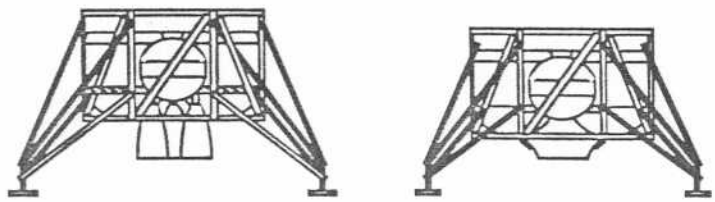

Baseline		
- Mass in Lunar Orbit (Lander + Payload)	110,000 lb	110,000 lb
- Descent ΔV	6,940 ft/sec	6,940 ft/sec

Common Characteristics	Conventional Propulsion (5 Engines, Modified RL10)	IME Propulsion (4TPA, 16 Combustors)	Discriminators
Safety	Dual Fault Tolerance	Dual Fault Tolerance	Failure Thrust Higher
Reliability (Firings/Failure)	0.9994	0.9995	Both Excellent, but IME More Recovery Options
Payload, Tonnes	23.1	23.6	+ 0.5 Tonne
Isp, Seconds	450	466	+ 16 Sec
Health Monitoring	Could be Incorporated	Integral	Benefit of New Des
Throttling Range	17:1 (Assumes Development)	5:1	5:1 vs 17:1
Plume Impingement Pressure, psi	1.3	Approximately 0.3	Reduce Debris
Thrust Vector Control	Gimbals	Thrust Mod and GG Exh	Eliminate System
Landed Height, ft	29.6	26.2	- 3.4 Ft

Figure 9- Comparison of Lander Characteristics

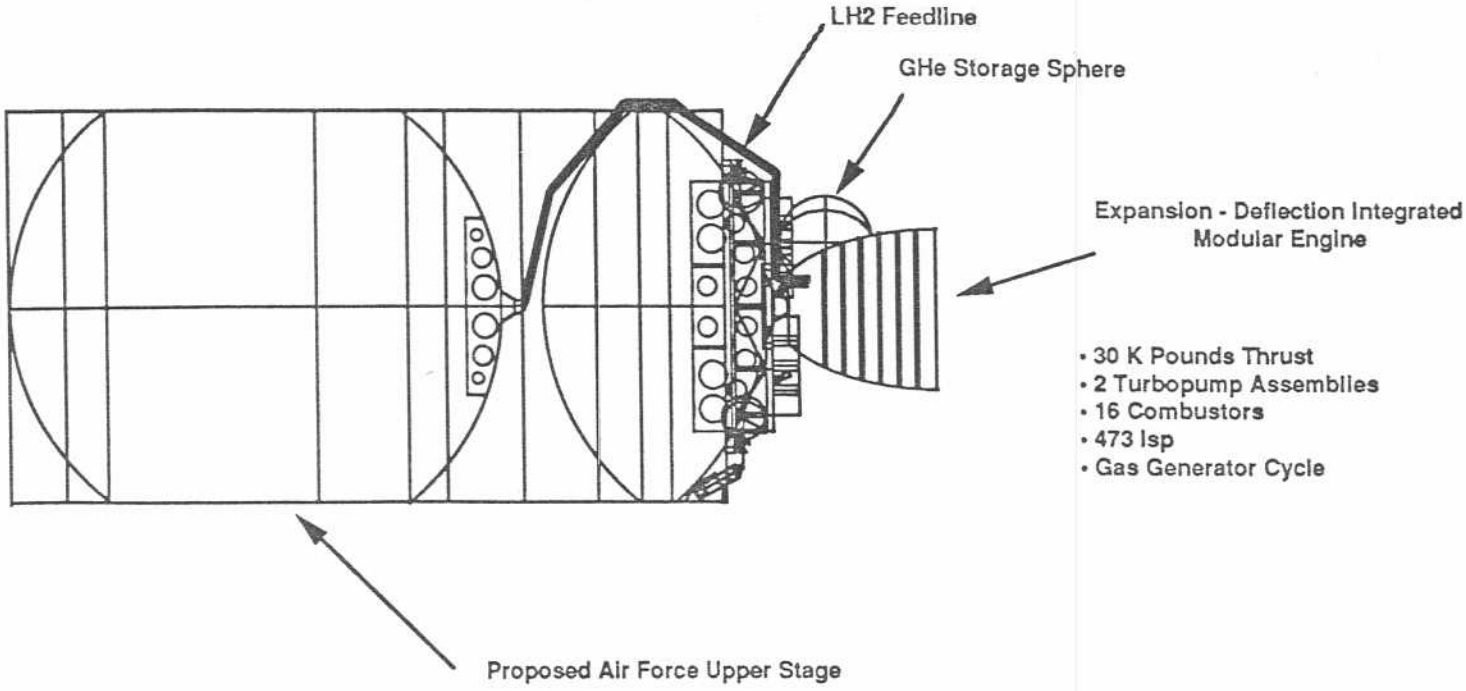

Figure 10- Upper Stage IME Configuration

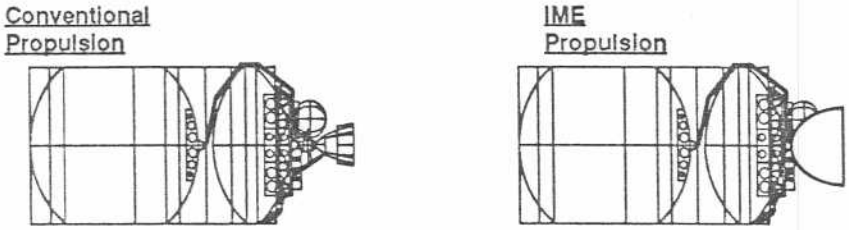

Baseline		
Propellant Wt	55,000 lb	55,000 lb
Mission	LEO	LEO

Characteristics	Conventional Propulsion (Single Engine, RL10A-4)	IME Propulsion (E-D, 16 Combustors, 2 TPA)	Discriminators
Safety	Zero Fault Tolerance	Single Fault Tolerance	Addtl Single Fault Tolerant
Reliability (Firings/Failure)	0.9987 (769)	0.9996 (2500)	325% Improvement
Payload, Pounds to LEO	16,000	21,000	5,000 Pound Increase
Health Monitoring	Could be Incorporated	Integral	Minimal Improvement, Since Mission Is Short.
Isp, seconds	449	473	24 Sec Increase
Thrust Vector Control	Gimbals	Thrust Mod and GG Exh	Eliminates Gimbal System, Replaces with Avionics.

Figure 11- Comparison of Upper Stage Characteristics