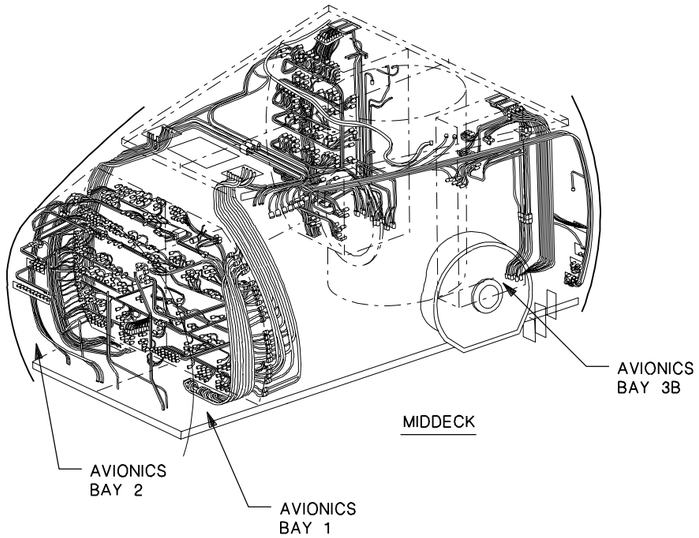

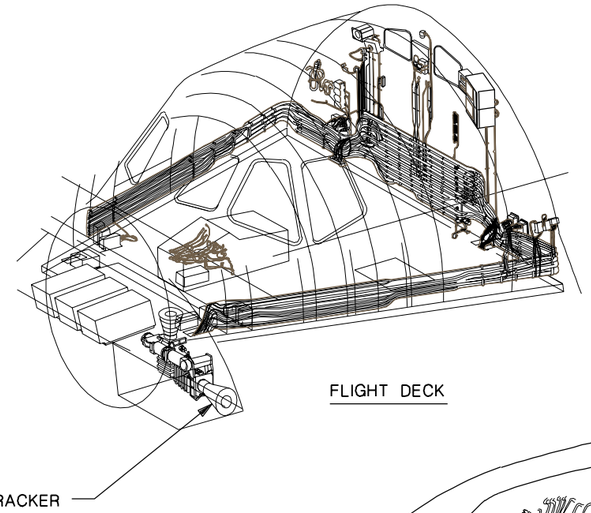

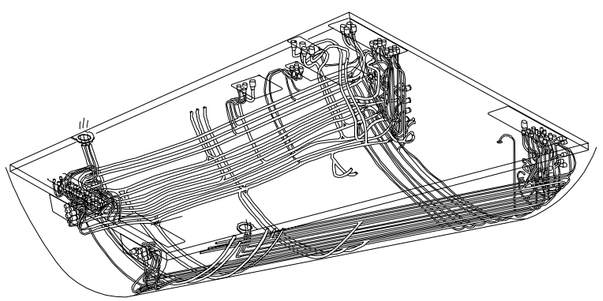

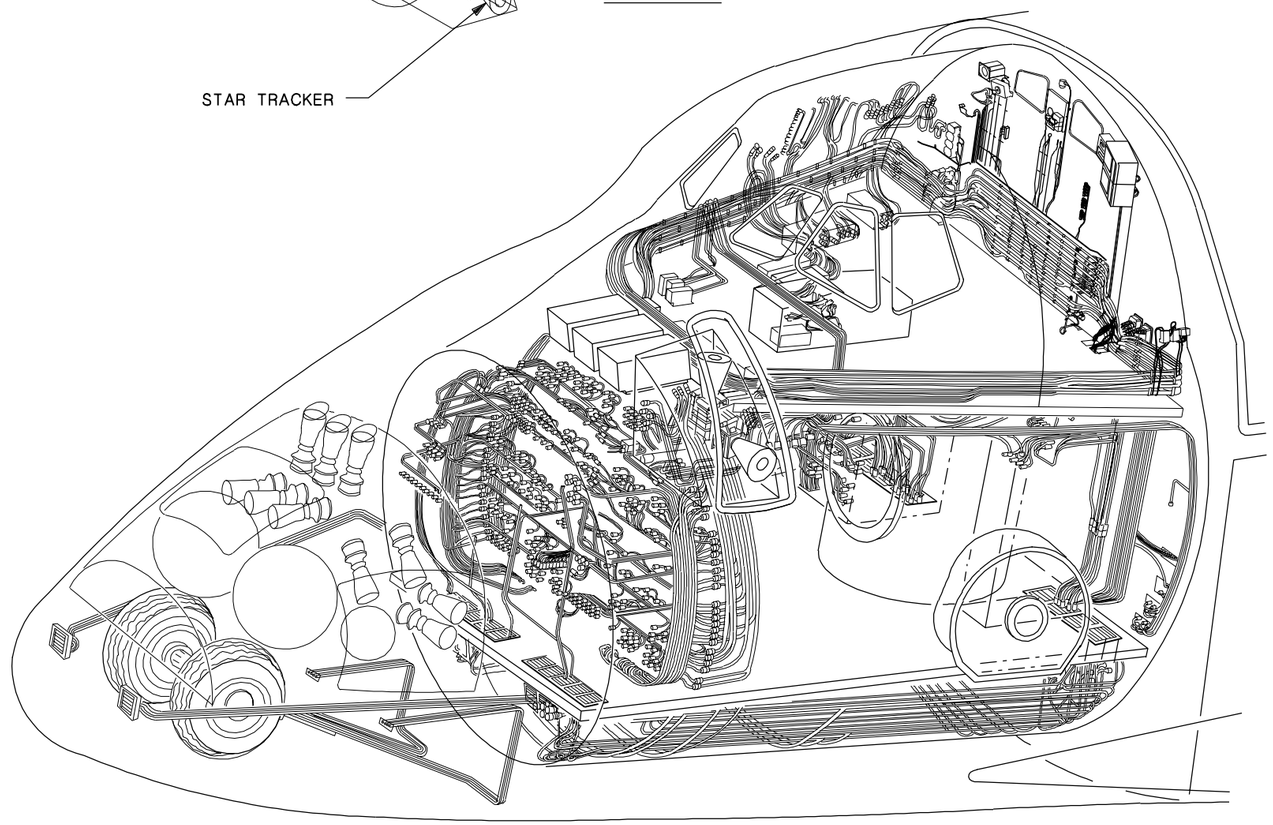

0208AOER1.BPT;1

(a) Forward fuselage.

Figure 2-8.- Wiring locator.