AIAA 93-4221

The Operationally Efficient Propulsion System: A Perspective

T. J. Harmon, J. O. Vilja, and G. L. Briley
Rockwell International Corporation
Rocketdyne Division
Canoga Park, CA

AIAA Space Programs and Technologies Conference and Exhibit

September 21-23, 1993/Huntsville, AL

For permission to copy or republish, contact the American Institute of Aeronautics and Astronautics
370 L'Enfant Promenade, S.W., Washington, D.C. 20024

THE OPERATIONALLY EFFICIENT PROPULSION SYSTEM: A PERSPECTIVE

T. J. Harmon,* J. O. Vilja,* and G. L. Briley**
Rockwell International Corporation
Rocketdyne Division
Canoga Park, California

Abstract

An operationally efficient propulsion system is a design objective for all propulsion systems. Historically, successful implementation of operationally efficient propulsion systems has not been achieved. The propulsion system is a major driver of stage operability, however other stage elements, such as the reaction control system (RCS), tank pressurization etc., add to the operability burden. Traditional practice defines a propulsion system from the inlet of the engine to the nozzle exit. An enlarged definition, wherein the propulsion system definition includes tankage, propellant fluid management systems, and the engine (including the RCS), leads to additional opportunities for stage simplification, elimination of redundancy, and improved operability. An analysis of recent historical propulsion system "operability" has been completed which underscores the operability of these systems.

Introduction

This perspective on an operationally efficient propulsion system was derived from Air Force contract F04701-91-6-0076, "Operational Integrated Modular Engine," completed in May 1992. The integrated modular engine (IME) study was a six-month program to study and design an operational IME. The study defined an IME propulsion system for a National Launch System (NLS) Upper Stage (NLSUS) vehicle. This IME design was used to quantify payoffs and advantages, and to identify key technical areas for further development and demonstration. Key propulsion system features were operability, integration, and modularity. The IME conceptual design focused on embodying these key design features.

The IME propulsion study produced a conceptual design which has high performance, is producible, has modular elements, and is operable. The IME engine design was driven to optimize the stage with respect to reliability and safety, operations, performance, cost, and technology level.

Discussion

The IME program objective was to design an advanced upper stage propulsion engine in the 30,000-lb thrust class. Design requirements/goals are listed in Table 1.

The Quality Function Deployment (QFD) process was used to refine propulsion requirements and evolve design strategies. QFD is a powerful methodology for linking customer requirements to design strategies. In addition, the QFD process elicits information on the relative importance of customer requirements. This systematic process was implemented at the beginning of the IME program and its results guided the design process.

The Table 1 requirements listed are global requirements. Detailed customer wants (requirements) and background drivers behind global requirements are not always documented. The IME program was set up to obtain from the customer, via the QFD process, all the mission/vehicle functional, operational, and cost requirements that would impact the propulsion system concept design. The initial QFD meeting included 14 Air Force, Aerospace Corp., and Phillips Lab staff to flesh out study requirements. Rocketdyne staff facilitated the meeting and asked clarification questions but did not participate in formulating requirements. These customer requirements were ranked in order of importance by the customer.

Figures 1 and 2 are pareto graphs of the customer requirements and design strategies for meeting customer requirements. These design strategies were affinitized into five areas: reliability and safety, operations, performance, cost, and technology level. Table 2 shows the relative emphasis of the design strategies. The most important area was reliability and safety. The next most important area was operability. Both reliability and safety and operability are congruent. For example, a high reliability requirement drives a system toward simplicity. A simple system (i.e., a system with few components) will usually have a high reliability rating. Likewise a simple system will usually be more operable. Cost and operability are also congruent when launch operations costs are elements of the cost equation.

Operability, and its intertwining with reliability, safety, and cost, drove the IME conceptual design. Current practice

Table 1. IME Requirements

Propellants	O_2/H_2
Thrust (lb)	30,000
Specific impulse (sec)	>470
Reliability	0.995
Operability	High
Production and Development Costs	Low

*Project Engineers, Members AIAA
**Director, Member AIAA

Copyright © 1993 by the American Institute of Aeronautics and Astronautics, Inc. All rights reserved.

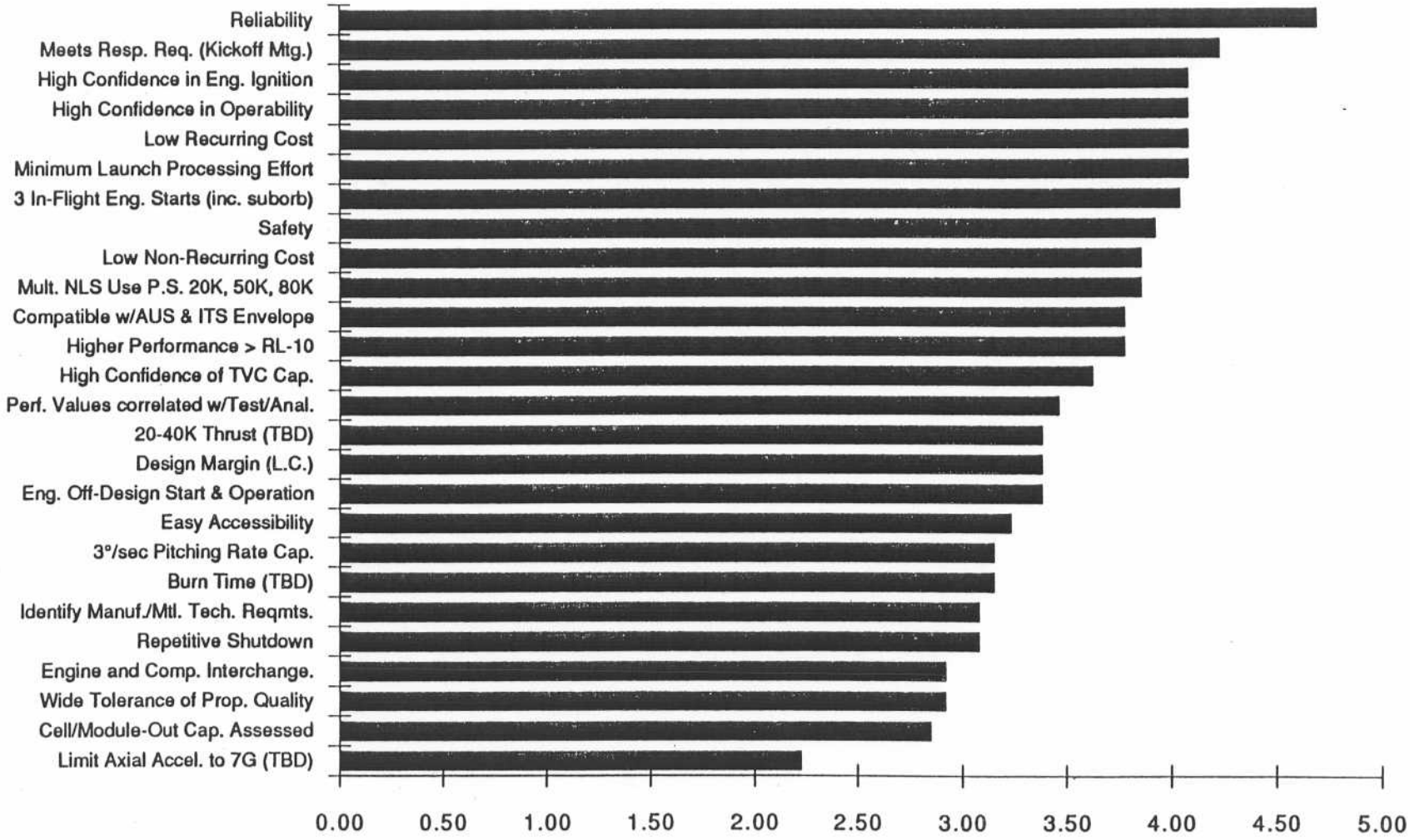

Fig. 1. IME Customer Requirements

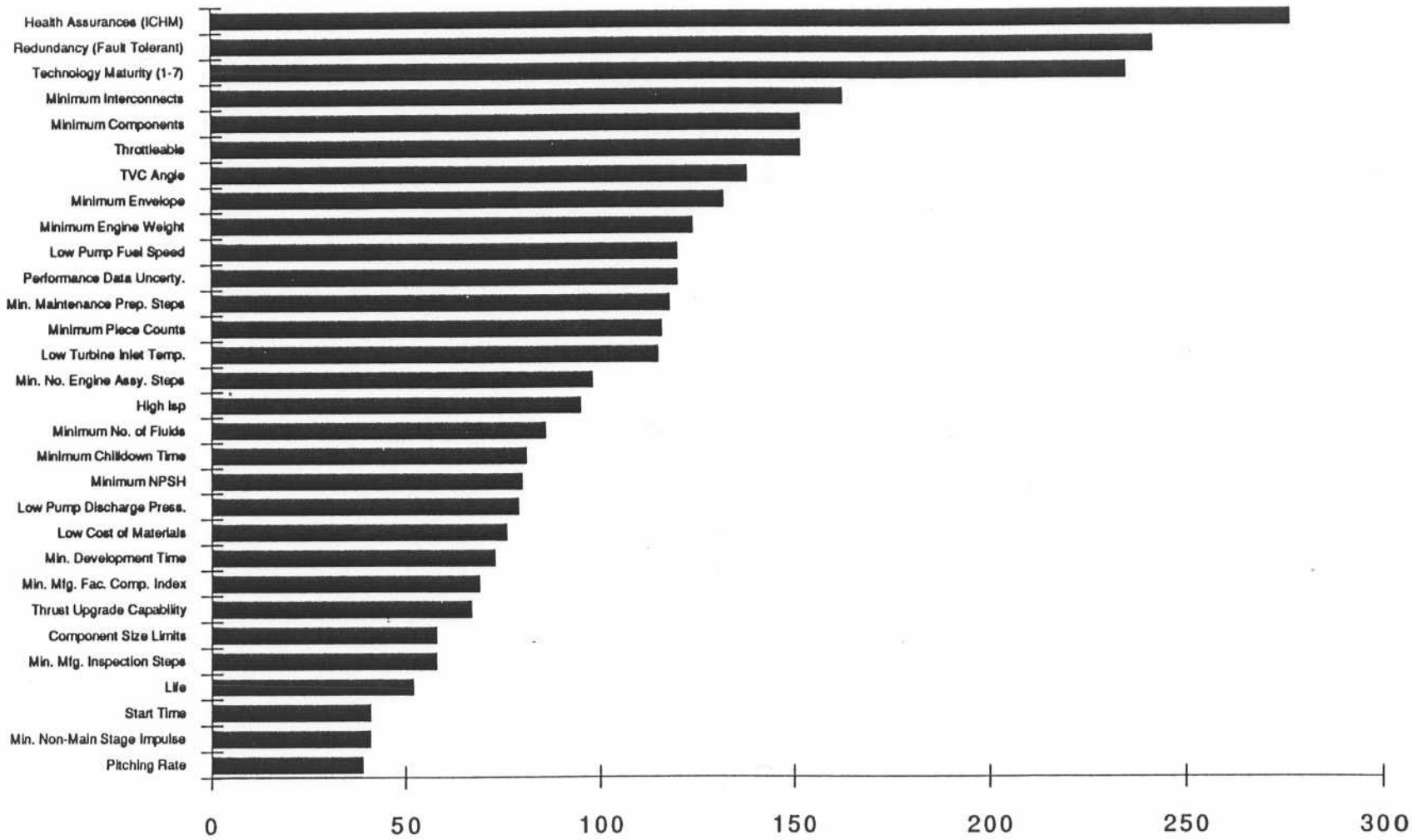

Fig. 2. Relative Improtance of IME Design Strategies

Table 2. IME Design Strategies Tailored to Customer Requirements

Requirements Met	Customer Emphasis
Reliability and Safety	35.2
Operations	23.2
Performance	23.1
Cost	11.4
Technology Level	7.1
Total	100.0

defines a propulsion system from the inlet of the engine to the nozzle exit. Other stage elements (i.e., the RCS, tank pressurization, etc.) impact stage operability. As upper stage operability encompasses the entire stage, it suggests the propulsion system definition should include tankage, propellant/fluid management systems, and the engine (including RCS). Figure 3 graphically describes the two propulsion system definitions. Maximizing integration within the enlarged boundary can simplify or eliminate operability concerns. This approach was used designing the IME and led to propulsion system modularization and innovative component placement. The resulting IME system was a highly operable, modular, upper stage propulsion system.

Reference Configuration

The reference IME configuration, used in the Rocketdyne proposal, is shown in Fig. 3 together with key features and characteristics. The reference propulsion system is comprised of two modules with one pump set per module. It employs a horizontal flow (H-F) nozzle configuration which is essentially an inside-out aerospike. The H-F configuration provided high performance and was lightweight and compact. It featured modularity, for testing components (combustor, turbopumps etc.), and incorporated advanced designs for enhanced producibility and operational efficiency.

Propulsion System Synthesis

The QFD process added depth to propulsion system requirements and alternate propulsion system configurations were postulated using the reference IME architecture and engine design as a starting point. Rocketdyne's experience database, together with QFD requirements, allowed for the selection of a manageable alternative design matrix addressing significant system and component design discriminators.

An innovative feature in the IME design synthesis was the recognition that significant improvements in the propulsion

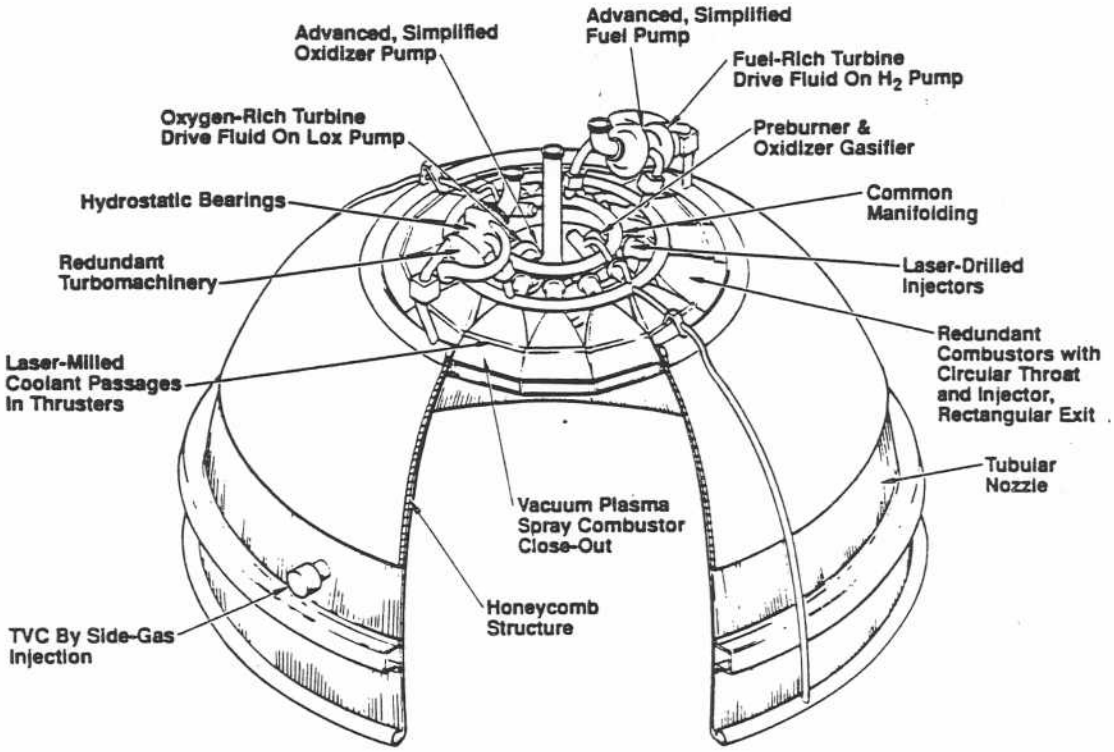

Fig. 3. Initial IME Reference Design

system would result if the design focused on incorporating operability enhancements. Operability implementation necessitated designing the propulsion system to minimize components, eliminate subsystems (i.e., pneumatic systems, hydraulic systems etc.), and use the propulsion system to accomplish, more effectively, functions traditionally provided by other subsystems (i.e., eliminating storable propellants by substituting a GH_2/GO_2 RCS).

The concept selection effort was comprised of the following subtasks: (1) synthesis of propulsion system concepts, (2) trades to narrow down the number of concepts, and (3) final concept rating and selection using the QFD methodology set up previously. Fourteen system concepts were synthesized and characterized extensively to provide data for the QFD process.

A depiction of the configuration options surveyed through this study are given in Fig. 4. The system-level synthesis approach and evaluation using the QFD matrix "how importance" results permitted rapid assessment of these alternative systems. Not all of the possible combinations derivable from this figure were chosen as alternate candidates, but all were considered. Many did not meet the basic program or mission requirements and were therefore eliminated from the study. Others were obviously inferior candidates and were dropped from consideration.

After the initial assessment of the full range of candidates, 14 representative propulsion systems were chosen as the most likely configurations to best meet the IME goals. A list of these candidates with their characteristics is given in Table 3. The 14 system candidates were competitively assessed using the QFD methodology for comparing system design features. Within each design strategy, each of the alternative IME propulsion system concepts were rated and a total score given, which represented the product of the design strategy importance times the relative standing of the particular concept in its class.

The 14 candidate propulsion systems could be divided into three classes of propulsion systems: the single bell systems, the modular bells, and the advanced nozzle systems. Modularity is a major objective of the IME study program. The modular concept leads to propulsion system flexibility (i.e., adding or subtracting modules to change thrust or other propulsion system characteristics) and simplifies development because a single module can be qualified for a range of applications. A single bell propulsion system is a variation of the modular bell concept.

The single bell class propulsion systems were, for this study, screened out of the group of 14 concepts based on the

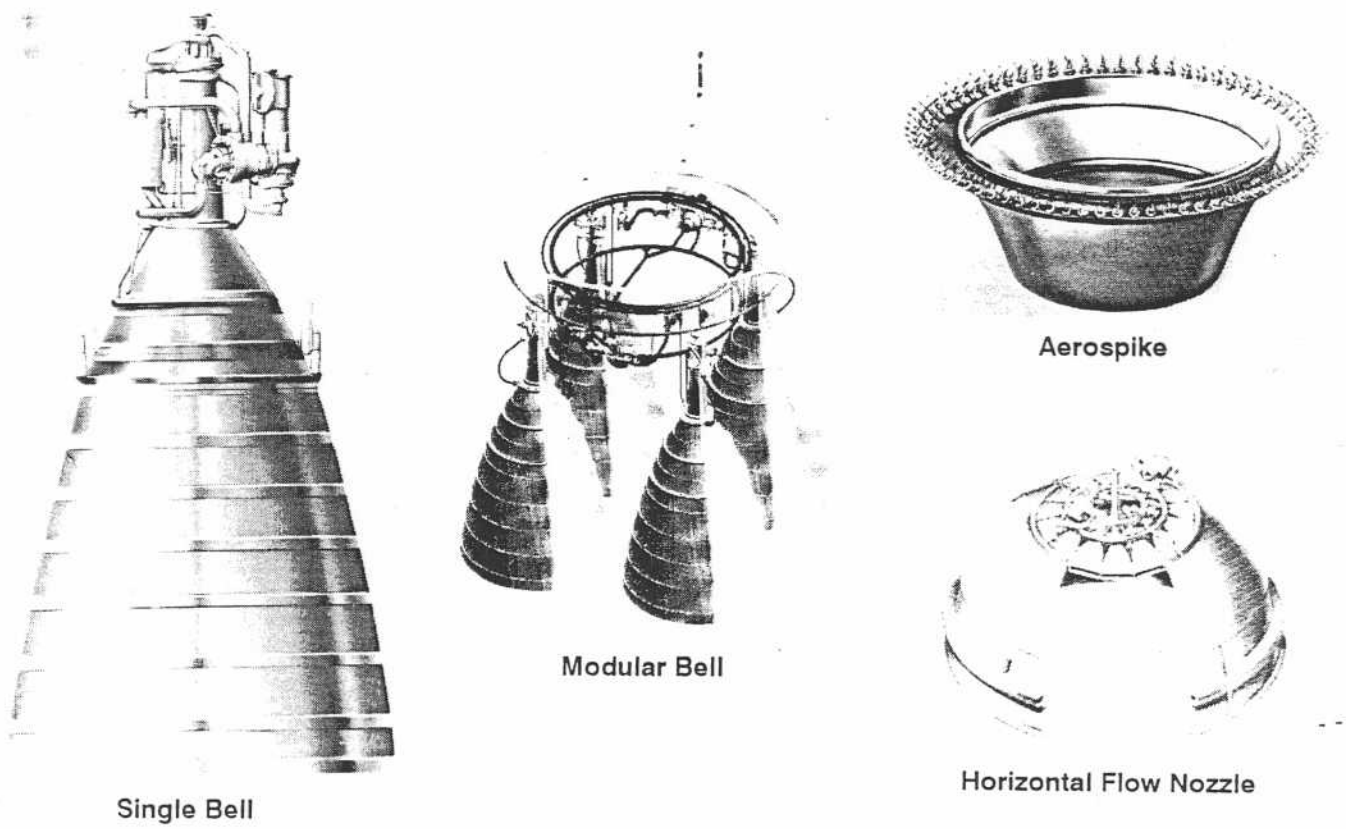

Fig. 4. Engine Types Evaluated

Table 3. IME Candidate Characteristics

Concept No.	B (Proposal)	1	2	2A	2B	2C	3	4	4A	5	6	6A	7	B1 (RL10A4)
Cycle Type	Hybrid	Exp.	Exp.	Exp.	Exp.	Exp.	S.C. ASE	Exp.	Exp.	Exp.	Hybrid Mix. PB	Hybrid Mix. PB	Hybrid	Exp.
Combuster Type	Cann. Bells	Cn. Bells w/Ribs	Bell	Bell	Bell w/Ribs	Ann. A/S	Bell	Bell	Bell	Cann. Bells	Cann. Bells	Cann. Bells	Cann. Bell	Bell
Number of Thrusters	16	16	1	1	1	1	1	4	4	36	16	16	16	1
Nozzle	ED/HF	ED/HF	Bell	Bell	Bell	A/S	Bell	4-Bells	4-Bells	A/S	ED/HF	ED/HF	ED/HF	Bell
Pumps	SLIC	SLIC	SLIC	3-Stage Conv.	4-Stage Adv.	3-Stage Conv.	3-Stage Conv.	SLIC	3-Stage Conv.	SLIC	SLIC	3-Stage Conv.	2-Stage Conv.	3-Stage Conv.
Number of Components	40	39	13	13	13	13	14	29	29	40	45	45	40	13
Piece Count	87	84	19	45	45	45	48	60	112	144	90	111	105	45
Chamber Pressure	2090	2388	2170	2135	2578	1000	2200	2305	2044	2086	2330	2920	1500	580
Pump Discharge Pressure	7451/7075	7356/3987	7346/3190	6973/3138	8870/3790	2900/2100	5000/4350	6774/3849	5625/3413	5892/3483	6586/6719	6541/6641	3226/3038	1360
Turbine Inlet Temperature	793/1000	1001/898	796/700	800/701	1030/909	1168	1600	859/768	851/762	805/726	1000/890	1600/1470	750/1000	410
RPM	436K	433K	325K	205K	201K	72K	96K	452K	259K	391K	391K	225K	183K	35.8K
Engine Length	42.7	38.0	105	106	98	23	82	68.7	71.2	41.0	38.5	34.4	48.0	90
Engine Diameter	61.6	54.8	57	58	52	65.2	51	67.2	71.4	58.8	55.5	49.6	69.2	43.9
Number of Modules	2	2	1	1	1	1	1	2	2	2	2	2	2	1
Area Ratios ϵ_O/ϵ_M	555/35	555/35	555	555	555	200	400	555	555	555	555/35	555/35	555/35	84
Specific Impulse	472.7	476.3	481.7	481.7	485.5	471	476	477.1	476.5	471.2	474.9	475.9	471.7	449
Weight	700	690	598	629	433	398	367	817	907	455	720	720	810	575

propulsion system design goals of subsystem out capability (reliability) and envelope. IME envelope constraints, while not limiting in the multiple bell class cases, was exceeded in all single bell cases due to excessive nozzle length. In addition, in the case of the RL10A-4, the performance goal (higher than 475 sec) could not be met.

IME Conceptual Design

The resulting IME design benefits are summarized in Table 4. The IME propulsion system is a two fluid (LOX and LH_2) system using three thrust chambers and two turbopump sets. The number of bell thrust chambers is requirements driven. The limiting length requirement eliminated the single bell option. One turbopump set is operational with the second set in a standby mode. Both the fuel and oxidizer pumps feature integral jet boost pumps. Both pumps operate at zero net positive suction head (NPSH). Simple low-cost innovative concept (SLIC) pumps, incorporating hydrostatic bearings, are used. Thrust vector control is by differential throttling. The engine features a hybrid cycle with an expander cycle driving the hydrogen turbopump and a LOX-rich preburner driving the oxygen turbopump. Interpropellant seals and purges between the pump and turbines are not required. The oxidizer pumps are tank mounted. Tank mounting the oxidizer turbopumps allows automatic pump preconditioning when LOX is loaded. Oxidizer side bleeds and purges for preconditioning are eliminated with this approach. The hydrogen pumps are mounted close to the thrust chambers. The propulsion system design eliminates purges, pneumatics, and hydraulics. The propulsion system also supplies gaseous hydrogen and oxygen for tank pressurization. In addition, the gaseous hydrogen and oxygen for tank pressurization could also be used to supply small GH_2 and GO_2 RCS thrusters, eliminating the need for a storable propellant (hydrazine) RCS.

Table 4. IME Modular Bell Benefits

Characteristic	Modular Bells
Minimum components, piece count, assembly and inspection	Fewest components, assembly and inspection steps
Component size limits (thrusters)	Near optimum for fabrication and development
Specific Impulse	Highest of concepts
Engine weight*	Slightly more but within acceptable range
Thrust vector control pitch rate	Within acceptable range
Performance data uncertainty	Best, minimum performance variation
Development time	Minimum development time and minimum new technology
Overall	Best choice - superior in major areas

*Installed weights TBD

Alternate number one, a three thrust chamber IME propulsion system configuration, which includes tank mounting the hydrogen pumps, was also considered. The fuel and oxidizer tank locations would have to be reversed to accommodate direct mounting of both pumps. Operability advantages are automatic preconditioning of both the oxidizer and fuel turbopumps when propellants are loaded.

Alternate number two, the single bell IME propulsion systems concept, ranks high in areas such as parts count, piece count, weight, and characteristics directly related to piece count, namely: manufacturing, inspection assembly, and reliability. Except for the limited length requirement, the IME single bell concept met the vehicle performance requirements. Only the requirement of "engine-out" and the envelope length requirement, without the aid of nozzle extending mechanisms, eliminated the single bell concepts in the QFD screening process. When engine-out capability importance is reduced, as it was later in the IME study, and if the envelope requirements can be met using extendible nozzles and gimballing, the single bell engine again becomes a strong if not superior candidate. This family of IME propulsion systems is presented in Fig. 5.

The IME modular propulsion system concept is a flexible approach at three different levels: (1) The IME design can be adapted to meet emphasis on different requirements, i.e., the spare turbopump can be eliminated to reduce weight and cost; turbine drive temperatures can be modified to accent performance or reliability. (2) System-level flexibility is shown by two alternate propulsion system configurations; a version of the IME which eliminates chilldown for both propellants. (3) The IME hardware can be used as modules for higher thrust applications. What has emerged is a unique family of modular propulsion systems which can be tailored to specific design applications by changing the number of thrust chambers, turbopumps, etc.

IME Propulsion Family Operability Features

The Operationally Efficient Propulsion System Study (OEPSS), a NASA-KSC sponsored study,[1] developed a database of operation concerns from expendable manned launch vehicles, expendable unmanned launch vehicles, and recoverable reusable launch vehicles. A review of this database showed most of the launch concerns are applicable to an upper stage propulsion system. A list of upper stage propulsion system (vehicle) concerns, derived from the launch vehicle concerns list, is presented in Table 5.

The Table 5 concerns list identifies operations problems that have a major impact on ground-based operations activities. The IME design approach recognized that system improvements would result by focusing on incorporating operability enhancements. A point-by-point addressing of concerns and IME design features is presented in Table 6.

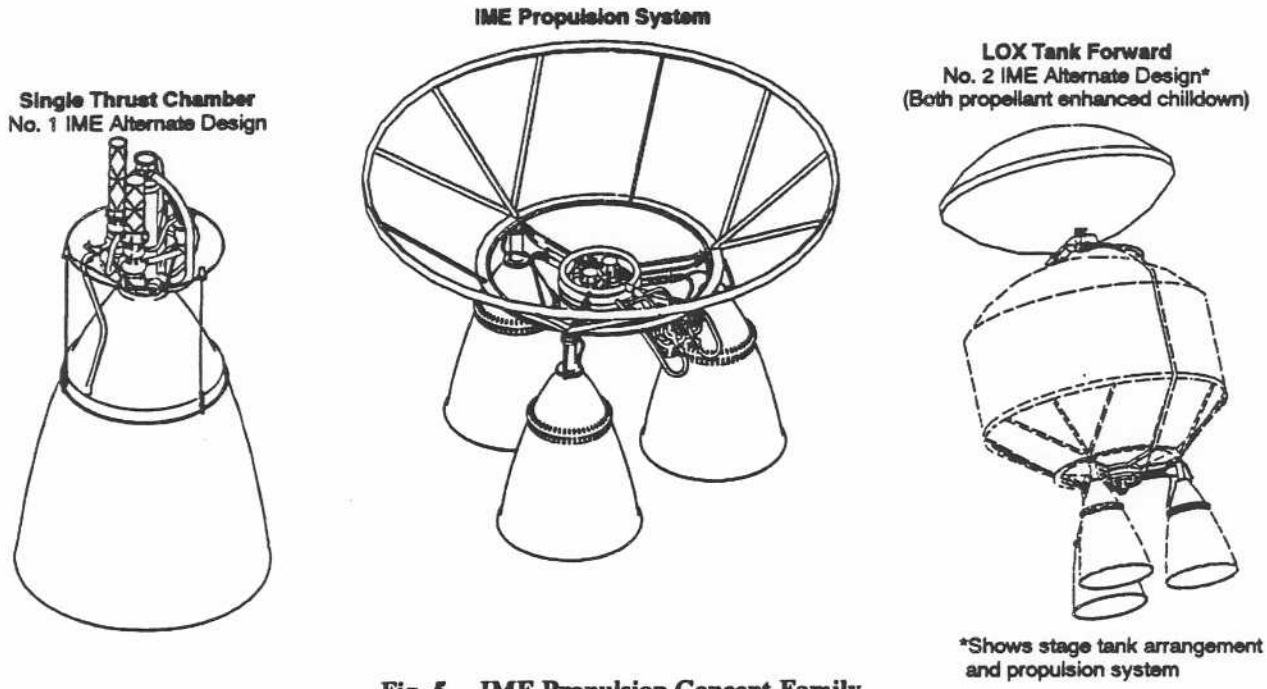

Fig. 5. IME Propulsion Concept Family

Table 5. Upper Stage Propulsion System Concerns

1	Closed aft compartments
2	Fluid system leakage
	• External
	• Internal
3	Hydraulic system
4	Multiple propellants
5	Hypergolic propellant (handling and safety)
6	Accessibility
7	Sophisticated heat shielding
8	Excessive components/subsystem interfaces
9	Hardware integration
10	Separate OMS and RCS
11	Pneumatic system
	• Actuation
	• Purging
	• Spin-up
	• Pressurization
12	Gimbal system
13	High maintenance hardware
14	Ordinance operations
15	Propellant tank pressurization systems
16	Excessive interfaces
17	Conditioning/geysering (LOX tank forward)
18	Preconditioning system
19	Expensive commodity usage (helium)
20	Hardware commonality
21	System contamination

Currently, the RL10/Centaur upper stage is the only upper stage propulsion system using LOX/LH_2 propellants. Therefore both the IME upper stage propulsion system and the RL10/Centaur upper stage were evaluated against this concern list. This comparison allows a qualitative comparison of the two upper stage systems. Table 7 compares the two systems and shows the IME design clearly addresses most operability concerns.

Redundancy

There is a tendency to add redundancy to a system to accommodate engine out or component out and increase reliability. A four thrust chamber configuration was originally selected to enable thrust chamber out capability (not possible with the three thrust chamber configuration). This requirement was questioned after a reliability survey of past propulsion system problems revealed thrust chamber malfunction not to be a major cause of vehicle and mission loss. Aerospace Corp., General Dynamics, and McDonnell Douglas staff comments agreed that thrust chamber failure has been shown to be remote. The above comments and analysis drove the design to the minimum number of thrust chambers to three, the minimum required number for differential throttling thrust vector control.

Operational efficiency is achieved through simplification (i.e., minimizing components). A careful review of the need for redundant components must be made in order not to burden the system with added operations to check out those redundant components.

Table 6. IME Operability Enhancements/Features

Fluid system leakage: The IME design is an all welded design, minimizing the potential for propulsion system leakage.
Hydraulic system: Thrust vector control is accomplished through differential throttling.
Multiple propellants: The IME upper stage is a two fluid system, oxygen and hydrogen.
Hypergolic propellant: RCS can use GOX/GH_2 thrusters supplied from the IME propulsion system, eliminating the requirement for hypergolic propellant on the stage.
Sophisticated heat shielding: The modular design permits limited, local heat shielding of the modules. Simple spray on heat shielding can be used.
Excessive components/subsystem interfaces: Interfaces are minimized by designing a two fluid propulsion system.
Hardware integration: A very high level of hardware integration is achieved in the propulsion system design and in the vehicle by defining the propulsion system to include tankage, propellant/fluid management systems, and the engine.
Separate OMS and RCS: The RCS could use IME propulsion propellants. The RCS propellants, gaseous H_2 and O_2, would be supplied by the IME (charging small tanks) during its operation. These tanks would be recharged each time the propulsion system is operated.
Pneumatic system: Pneumatic systems are eliminated on the IME propulsion system.
Gimbal system: The thrust chambers are fixed and thrust vector control is accomplished through differential throttling.
High maintenance hardware: Elimination of the helium supply system for tank pressurization, pneumatic, and hydraulic system, and the use of SLIC turbopumps (simple design with a minimum of components and no maintenance requirement).
Propellant pressurization system: The IME design uses GH_2 and GOX from propulsion system operation to pressurize the propellant tanks.
Excessive interfaces: Interfaces are reduced in the propulsion system and vehicle by designing a two fluid system and by optimizing installation of modular components. This result is a fallout of totally integrating the engine components into the propulsion system design.
Preconditioning: The oxidizer turbopumps, attached to the propellant tanks, are preconditioned when propellants are loaded. The fuel turbopump and line would require preconditioning. An alternate configuration of tank mounting the fuel turbopump can be used, however the oxidizer and fuel propellant tank locations would have to be reversed.
Expensive commodity usage (helium): Helium is not used on the IME upper stage.
Hardware commonality: Common hardware, thrust chambers and valves, are used where appropriate.
System contamination: Use of a two fluid integrated upper stage with a low number of interfaces reduces the susceptibility of stage contamination.
Retractable umbilical: The umbilical requirements are simplified with a two fluid plus electrical umbilical system.

Conclusion

The design approach that is operations driven and treats the engine as an integrated part of the upper stage results in significant operability, reliability, and cost benefits.

The operationally efficient propulsion system that evolved from the IME contract was a modular propulsion system that best met the customer's requirements because: (1) it provided the highest reliability and safety as reflected by its simpler designs, fewer parts, and lowest piece counts; (2) it has the highest rating in performance confidence and operability due to its mature thrust chamber (combustor, injector, nozzle) design, its simple turbomachinery, and the lack of gimbal accessories (hydraulics or pneumatics) and purge-gas systems (pneumatics); (3) it provides the highest performance on account of its straightforward bell nozzle design which provides uninterrupted, low-loss expansion of the hot gases; (4) its overall simplicity of design will result in both low development and low production cost; and (5) its modularity and component sizes are readily adaptable to other planned applications.

Further simplification is possible if the interrelationships among envelope, performance, cost, and reliability are examined carefully for a given application to allow consideration of a single bell engine configurations.

Reference

1) Wong, G., "Operationally Efficient Propulsion System (OEPSS) Data Book," RI/RD90-149-5, 24 April 1990.

Table 7. The IME Design Eliminates or Improves 19 of 27 Operational Concerns Exhibited by Conventional (RL10/Centaur) Upper Stage Systems

Upper Stage Propulsion Concerns List	IME Upper Stage	IME Upper Stage Option 1-LOX Tank Forword	RL10/Centaur
1 Closed aft compartments	same	same	same
2 Fluid system leakage			
•External	enhanced, welded assy	enhanced, welded assy	welds and flanges
•Internal	same	same	same
3 Hydraulic system for valve actuators and TVC	none	none	yes
4 Multiple propellants	2 fluid system , H2 & O2	2 fluid system , H2 & O2	yes, H2,O2,hypergols
5 Hypergolic propellant	no	no	yes
6 Accessibility	enhanced	enhanced	lower
7 Sophisticated heat shielding	reduced	reduced	higher
8 Excessive components/subsystem interfaces	lower	lower	higher
9 Hardware integration	higher	higher	lower
10 Separate OMS and RCS	no	no	yes
11 Pneumatic system			
•Actuation	no	no	yes
•Purging	no	no	yes
•Spin-up	no	no	no
•Pressurization	no	no	yes
12 Gimbal system	no	no	yes
13 High maintenance turbopumps	no	no	yes
14 Ordinance operations	same	same	same
15 Propellant tank pressurization systems	GH2 & GO2	GH2 & GO2	He, GH2, GOX
16 Excessive interfaces	fewer	fewer	more
17 Conditioning/Geysering	no	no	no
18 Preconditioning system	no LOX, yes LH2	no	yes
19 Expensive commodity usage - helium	no	no	yes
20 Hardware commonality	enhanced	enhanced	lower
21 System contamination	same	same	same
22 Retractable umbilical	simpler	simpler	more complex
23 Helium spin start	none	none	none