AIAA JUNE 28 - 30, 1993 CONFERENCE AIAA 93-1887

NASA SCIENTIFIC AND TECHNICAL DOCUMENT AVAILABILITY AUTHORIZATION (DAA)

To be initiated by the responsible NASA Project Officer, Technical Monitor, or other appropriate NASA official for all presentations, reports, papers, and proceedings that contain scientific and technical information. Explanations are on the back of this form and are presented in greater detail in NHB 2200.2, "NASA Scientific and Technical Information Handbook."

☒ Original
☐ Modified

(Facility Use Only)
Control No. _____
Date _____

I. DOCUMENT/PROJECT IDENTIFICATION (Information contained on report documentation page should not be repeated except title, date and contract number)

Title: Fluid System Design Studies of Integrated Modular Engine System

Author(s): Bruce Frankenfield

Originating NASA Organization: NASA Lewis Research Center Propulsion and Fluid System Div.

Performing Organization (if different) _____

Contract/Grant/Interagency/Project Number(s) _____

Document Number(s) _____ Document Date _____

(For presentations or externally published documents, enter appropriate information on the intended publication such as name, place, and date of conference, periodical or journal title or book title and publisher: 29th Joint Propulsion Conference Monterey, CA June 28 - July 1, 1993

These documents must be routed to NASA Headquarters, International Affairs Division for approval. (See Section VII))

II. AVAILABILITY CATEGORY

Check the appropriate category(ies):

Security Classification: ☐ Secret ☐ Secret RD ☐ Confidential ☐ Confidential RD ☒ Unclassified

Export Controlled Document - Documents marked in this block must be routed to NASA Headquarters International Affairs Division for approval.

☐ ITAR ☐ EAR

NASA Restricted Distribution Document

☐ FEDD ☐ Limited Distribution ☐ Special Conditions-See Section III

Document disclosing an invention

☐ Documents marked in this block must be withheld from release until six months have elapsed after submission of this form, unless a different release date is established by the appropriate counsel. (See Section IX).

Publicly Available Document

☒ Publicly available documents must be unclassified and may not be export-controlled or restricted distribution documents.

☐ Copyrighted ☐ Not copyrighted

III. SPECIAL CONDITIONS

Check one or more of the applicable boxes in each of (a) and (b) as the basis for special restricted distribution if the "Special Conditions" box under NASA Restricted Distribution Document in Section II is checked. Guidelines are provided on reverse side of form.

a. This document contains:

☐ Foreign government information ☐ Commercial product test or evaluation results ☐ Preliminary information ☐ Information subject to special contract provision

☐ Other—Specify _____

b. Check one of the following limitations as appropriate:

☐ U.S. Government agencies and U.S. Government agency contractors only ☐ NASA contractors and U.S. Government agencies only ☐ U.S. Government agencies only

☐ NASA personnel and NASA contractors only ☐ NASA personnel only ☐ Available only with approval of issuing office: _____

IV. BLANKET RELEASE (OPTIONAL)

All documents issued under the following contract/grant/project number _____ may be processed as checked in Sections II and III.

The blanket release authorization granted _____ (Date) is:

☐ Rescinded - Future documents must have indivdual availability authorizations.

☐ Modified - Limitations for all documents processed in the STI system under the blanket release should be changed to conform to blocks as checked in Section II.

V. PROJECT OFFICER/TECHNICAL MONITOR

Typed Name of Project Officer/Technical Monitor	Office Code	Signature	Date
Robert L. Allen	4220	Robert L. Allen	10-27-92

VI. PROGRAM OFFICE REVIEW ☐ Approved ☐ Not Approved

Typed Name of Program Office Representative	Program Office and Code	Signature	Date

VII. INTERNATIONAL AFFAIRS DIVISION REVIEW

☐ Open, domestic conference presentation approved.

☐ Foreign publication/presentation approved.

☐ Export controlled limitation is approved.

☐ Export controlled limitation is not applicable.

☐ The following Export controlled limitation (ITAR/EAR) is assigned to this document: _____

International Affairs Div. Representative	Title	Date

VIII. EXPIRATION OF REVIEW TIME

The document is being released in accordance with the availability category and limitation checked in Section II since no objection was received from the Program Office within 20 days of submission, as specified by NHB 2200.2, and approval by the International Affairs Division is not required.

Name & Title _____ Office Code _____ Date _____

Note: This release procedure cannot be used with documents designated as Export Controlled Documents, conference presentations or foreign publications.

IX. DOCUMENTS DISCLOSING AN INVENTION

a. This document may be released on _____ (Date) Installation Patent or Intellectual Property Counsel _____ Date _____

b. The document was processed on _____ (Date) in accordance with Sections II and III as applicable. NASA STI Facility _____ Date _____

X. DISPOSITION

Completed forms should be forwarded to the **NASA Scientific and Technical Information Facility, P.O. Box 8757, B.W.I. Airport, Maryland 21240**, with either (check box)

☐ Printed or reproducible copy of document enclosed

☐ Abstract or Report Documentation Page enclosed. The issuing or sponsoring NASA installation should provide a copy of the document, when complete, to the NASA Scientific and Technical Information Facility at the above listed address.

Fluid System Design Studies of Integrated Modular Engine System

Bruce J. Frankenfield

NASA Lewis Research Center

ABSTRACT

A study was performed to develop a fluid system design for an integrated modular engine (IME) configuration using an expander cycle engine. The primary design driver of the IME configuration was system reliability. The IME fluid system was designed as a single fault tolerant system, while minimizing the required fluid components. A comparison of components was made between the network IME system and the non-network (clustered) system. In addition, IME fluid system design concerns of high pressure manifolds, interfaces, component arrangement and system interactions are addressed.

INTRODUCTION

Integrated modular engine (IME) designs are being considered for future space propulsion applications. In a modular engine concept, the turbopumps and the thrust chambers are independent of each other, but are joined by common manifolds. With this configuration, should a component fail, either the turbopump or thrust chamber could be shutdown and isolated with valves. Once the failed component is isolated, the remaining components would operate at a slightly higher design condition to complete the mission. Also, the modular engine concept allows for system components to become interchangeable as line replaceable units. In today's conventional, clustered engine design, each engine acts as a stand-alone unit. The turbopumps and valves are dedicated to only one thrust chamber, so a component failure would cause the entire engine to shutdown. Therefore, the modular engine system appears to offer greater reliability when compared to the clustered engine system.

Trade studies were done to optimize various fluid system configurations for an IME expander engine cycle. Each configuration goal was to provide system redundancy and isolation capability while minimizing the complexity and the total number of valves. In addition, the minimum number of thrust chambers was determined for a single failure tolerant operation. The IME design requires numerous system manifolds between various fluid components. These manifolds must operate at high pressures and at varying temperatures, and are not redundant.

DESIGN ASSUMPTIONS

1. Provide a single point failure capability for the pumps, turbines and thrust chambers (components).

2. Pumps or turbines can make up lost performance for any one failed component.

3. Thrust chambers are permanently fixed to the vehicle, thereby eliminating engines with gimbal mounts and associated hydraulic systems.

4. Health monitoring instrumentation and sensors can identify failures and react by isolating the failed component.

5. Gearboxes will not be used to couple the fuel and oxidizer pumps.

SYSTEM DESCRIPTION

A fluid schematic of an integrated modular engine design is provided in Figure 1. A typical clustered engine design is provided in Figure 2. The IME design is based on a NASA Lewis Research Center effort to examine the integrated modular engine concept and determine methods of physically configuring such a system. In the IME design, an expander engine cycle is used.

The optimal IME design configuration grouped pumps, turbines and thrust chambers in a parallel flow pattern to allow for a single point failure of any one component. Once a failed component is detected, that component is isolated with valves from the rest of the fluid system. Both the pumps and turbines required an inlet valve to shutdown the flow in case of a failure and also an outlet check valve to prevent reverse flow from the common outlet manifold. Each thrust chamber required four isolation valves in case of a failure. Three of these valves required a flow control and isolation capability while the fourth valve, a check valve was required to prevent reverse flow. The turbines are configured in a parallel/series network which optimize the turbine performance. All of the fuel and oxidizer pump turbines have parallel flow to allow for single point failure isolation. This IME design requires five high pressure manifolds operating between 2000-4500 psig and at varying temperatures. The isolation valves are not redundant, thereby the valves are a source of single point failures.

RESULTS

The results of the IME fluid design are the following:

1) Eight thrust chambers are the minimum needed to provided thrust vector control. If any one thrust chamber fails, the opposite thrust chamber must also shutdown to balance overall vehicle thrust through the vehicle's center of gravity. Placement of the thrust chambers should be the maximum radial distance from the vehicles centerline to minimize differential throttling requirements. The thrust chambers are directly fixed to the vehicles thrust ring and provide only for pitch and yaw control by regulating thrust levels.

2) Four fuel and four oxidizer turbopump assemblies are the minimum needed to provide flow margin in the event of one failed component. Placement of the turbopumps are between the thrust chambers and outside of the thrust ring for greater access. The fuel turbopumps are placed on one side of the vehicle and the oxidizer turbopumps on the opposite side of the vehicle to minimize the pump inlet ducting lengths.

3) Five manifolds are require to collect and redistribute flow between the turbopumps and thrust chambers. The manifolds have a torus shape and are placed inboard of the thrust chambers and turbopumps. These manifolds are not rigidly fixed to the structure, but float to allow for thermal expansion and contraction. The manifolds are geometrically configured such that stresses induced by thermal expansion /contraction are minimized.

4) Sixty six valves are required for the IME design to provide component isolation.

FINDINGS

1) Comparing the IME design to the clustered engine design, the number of turbopumps assemblies are reduced from 8 to 4, but the number of isolation valves are increased from 32 to 66.

2) The ducting for the IME design is more complex with the five manifolds and with twice as many valves. The interface connections also posed greater alignment problems and increased the number of leakage points.

FIGURE 1:

INTEGRATED MODULAR ENGINE (IME) SCHEMATIC DIAGRAM

EXPANDER CYCLE CONFIGURATION

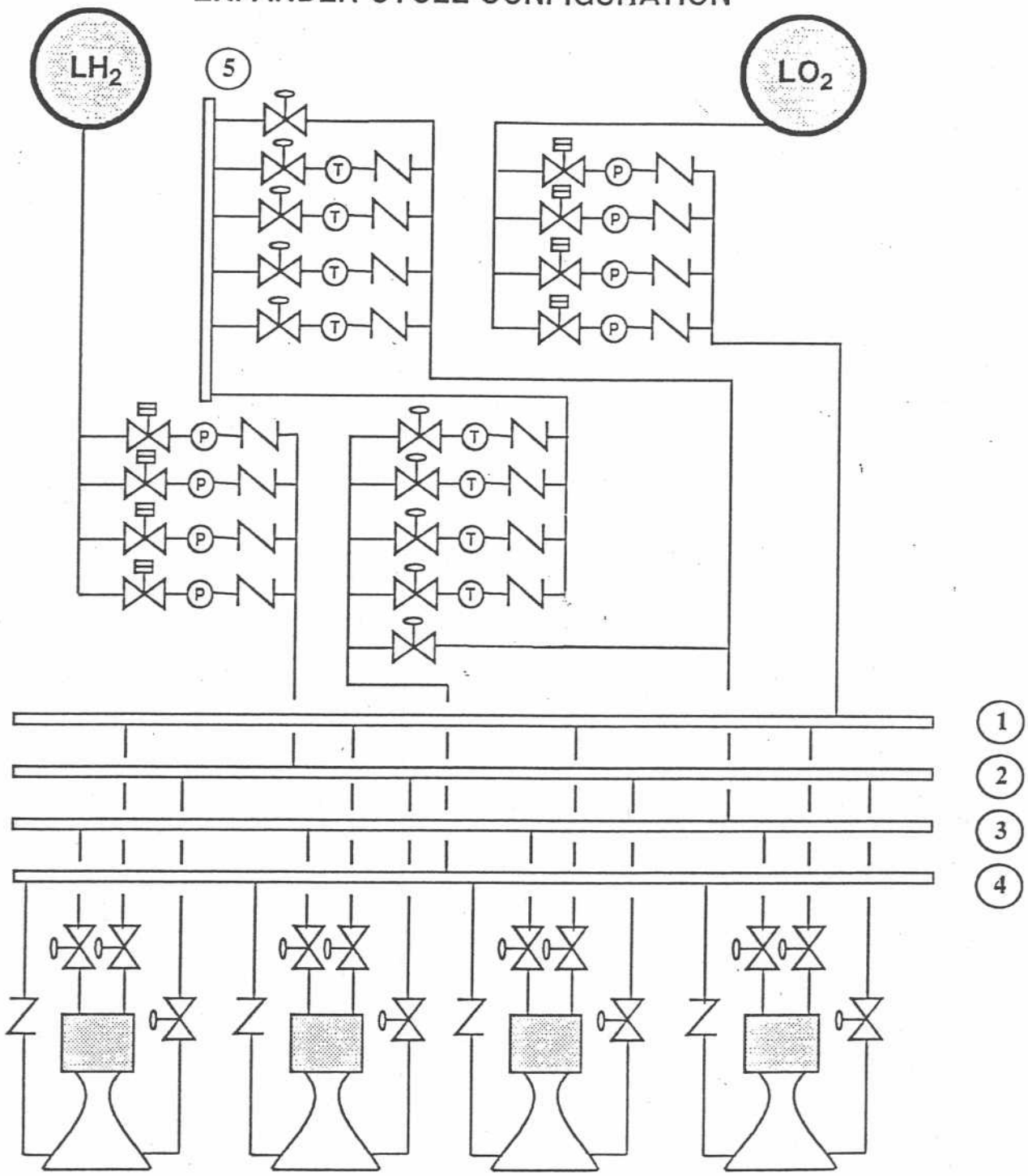

8 THRUST CHAMBERS/
VALVES TOTAL

CONTROL VALVE

SHUT-OFF VALVE

CHECK VALVE

(P) PUMP

(T) TURBINE

MANIFOLDS

(1) LOX PUMP OUTLET

(2) LH2 PUMP OUTLET

(3) LOX TURBINE OUTLET

(4) LH2 TURBINE INLET

(5) LOX TURBINE INLET

FIGURE 2:

CLUSTERED (DISCRETE) ENGINE SCHEMATIC DIAGRAM

EXPANDER CYCLE CONFIGURATION

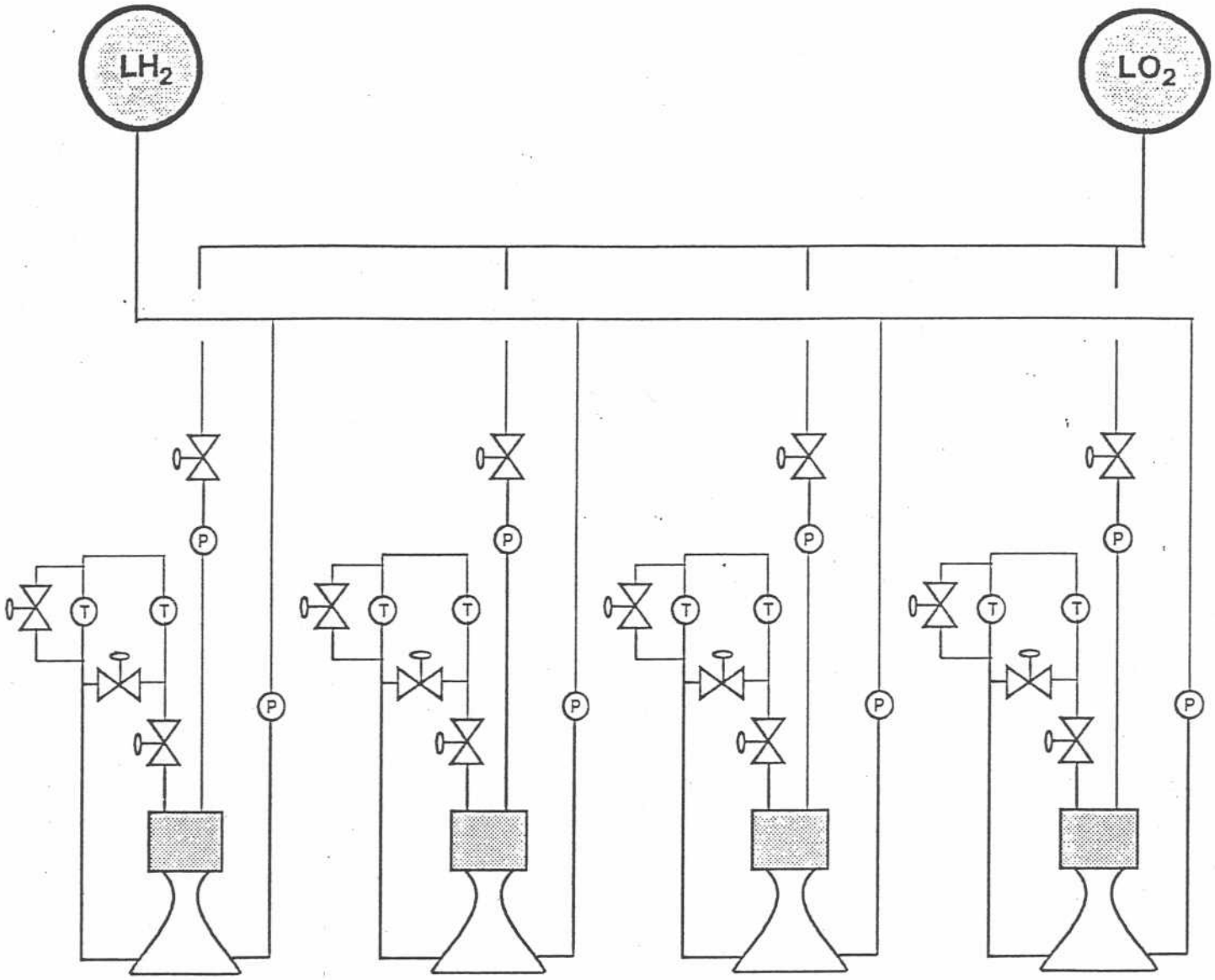

8 THRUST CHAMBERS/
TURBOPUMP ASSEMBLIES TOTAL

CONTROL VALVE

SHUT-OFF VALVE

CHECK VALVE

(P) PUMP

(T) TURBINE