AIAA JUNE 28-30 1993 CONFERENCE

AIAA 93-1886

Reliability Studies of Integrated Modular Engine System Designs

Terry L. Hardy

NASA Lewis Research Center

Douglas Rapp

Sverdrup Technology, Inc.

ABSTRACT

A study was performed to evaluate the reliability of integrated modular (IME) engine concepts. Comparisons were made between the networked IME systems and non-networked clustered (discrete) systems. The evaluation was conducted for both expander cycle and gas generator cycle configurations to determine the reliability drivers of the IME concept. Both binomial approximation techniques and Markov techniques were employed to evaluate total system reliability. In addition, initial Failure Mode and Effects Analyses, Preliminary Hazard Analyses, and Fault Tree Analyses were performed to allow detailed evaluation of the IME concept. A discussion of these system reliability techniques is also presented.

INTRODUCTION

Integrated Modular Engine (IME) designs are currently being considered for use in various space propulsion applications[1-4] In the networked, or modular, engine concept, the turbopumps and the combustion chambers/nozzles are joined by common manifolds. In this system, therefore, a turbopump or a thrust chamber could be shut down independently should a failure occur in either component. Conventional non-networked, or clustered, engines, on the other hand, are designed such that each engine system is a stand-alone unit. In the clustered system if a turbopump fails the corresponding thrust chamber must also be shut down. Therefore, the IME offers potential advantages of increased fault tolerance and reliability when compared to clustered systems. It is the purpose of this report to evaluate the reliability for both the IME and the clustered engine system, to determine the reliability drivers of the IME system, and to conduct a sensitivity study on component reliability of several critical parameters associated with the IME.

Several techniques were used to evaluate the reliability of the integrated modular engine. A modified binomial approximation technique was employed to characterize the reliability of the system based on the reliability of the various components. In the binomial approximation technique, or k-out-of-n model, "k" components out of a total of "n" components must operate for the entire system to perform successfully. Markov techniques were also used to evaluate the effects of component failure on mission parameters. Based on the present operational state of the IME or clustered system, the discrete-time Markov process enables the prediction of failure states. System reliability functions were subsequently formulated by time marching within the finite Markov state space; i.e., the codomain which included all feasible operational states and the single system failure state. The emphasis of the trade-

off studies using the binomial and Markov techniques was in comparing systems, rather than on absolute reliability estimates due to a large uncertainty in the available component reliability data.

Failure Mode and Effects Analyses (FMEA)were also conducted for an IME system to determine the effects of a single-point failure, such as the loss of a feed system valve. Preliminary Hazard Analyses (PHA) were performed to allow for a qualitative determination of the system risk. Probabilistic risk assessment techniques were also investigated, and initial investigations using fault tree analyses were performed.

SYSTEM DESCRIPTION

An integrated modular engine design is provided in figure 1. This design is based on a NASA Lewis Research Center effort to examine the integrated modular engine concept and determine methods of physically assembling such a system. In this IME design an expander cycle configuration was used. As a baseline eight combustion chambers were included with four turbopumps (4 turbines and 4 pumps) for both the liquid hydrogen and liquid oxygen feed systems. Five manifolds were required in this design to isolate the chambers and the turbopumps should a failure occur in either subsystem. In addition, control valves were added on each of the turbines and thrust chambers and shut-off valves were included on each of the pumps to provide individual isolation of the components. By comparison, a clustered system, shown in figure 2, has no manifolds and four valves for each engine.

ASSUMPTIONS

Several key assumptions were used to formulate the analysis using the binomial distribution:

1. Each thrust chamber assembly an included injector, ignitor, chamber, nozzle, plumbing, and valves, while the turbopump assembly included piping, valves, and the turbomachinery. The turbopump bypass valves were treated as separate entities.

2. Component shut-down rate estimates were obtained from reference 4. The component reliability is by definition the shutdown rate subtracted from unity.

3. Manifold reliability estimates were obtained by using ducting reliability on existing space systems.

4. All similar components have the same constant reliability.

5. The binomial distribution applies: no partial failures of components, active redundancy, non-repairable components, no operability concerns (if one IME turbopump fails, the remaining turbopumps can meet the power requirement).

6. Except where noted, the health monitoring system could identify and respond to a problem 100% of the time.

7. Except where noted, no common cause failures were included.

8. Sensor or controller reliabilities were not included in the analysis.

9. In cases where redundancy was not considered, total system failure was obtained by adding the failure rates of the individual components.

10. For the integrated modular engine the number of turbopumps was half the number of thrust chambers; for the clustered system the number of turbopumps equalled the number of thrust chambers.

11. If a turbine failed on either the oxygen or hydrogen the corresponding pump would be deactivated, and vice-versa.

Similar assumptions were employed in the Markov analyses with the following exceptions or notations:

1. Fixed IME and clustered configurations were analyzed.

2. Failure rates (number of failures per second of system operation) obtained from reference 4 were used.

3. Total system failure was defined as the system inability to provide greater than or equal to 50% thrust.

4. Limited operability was addressed; e.g., failure of one thrust chamber in the IME configuration forced an instant shutdown of the thrust chamber located 180° from the failed chamber in order to maintain thrust vector control.

RESULTS

Binomial Distribution Analysis

Figure 3 shows a binomial analysis comparison of the IME and clustered systems for the case of one thrust chamber out and one turbopump out. As can be seen by the figure, the clustered system provided reliabilities which varied between 0.99998 and 0.99975 for 4 to 12 thrust chambers. These reliabilities corresponded to system shutdown rates of 0.02 to 0.25 per 1000 firings. In contrast, the IME had reliabilities varying from 0.99789 to 0.99773, or shutdown rates of 2.11 to 2.27 per 1000 firings, for 4 to 12 thrust chambers. Examination of the results showed that the key parameters affecting the overall system reliability were the manifolds and the turbine bypass valves for the expander cycle IME configuration. Therefore, the sensitivity of system reliability to the reliability of these components was examined.

Figure 4 shows the effect of manifold reliability on total system reliability using a binomial analysis. From the figure it can be seen that the clustered engine concept provided higher reliabilities when compared to the IME concept except when the manifold reliability was high (low shutdown rate). The manifold includes the connections from the component piping, and these connections may be the weak point in the manifold design. Therefore, because the manifold has been shown to be the reliability driver, it may be necessary to focus future efforts in IME design on the manifold reliability for the IME concept to ultimately prove to be more reliable than clustered concepts.

Additional trade-offs were performed to determine the effect of the correlation factor on the total system reliability. The correlation factor is defined as the ability of the system to detect and mitigate failures in the propulsion system. From these studies it was found that the correlation factor had a higher impact on system reliability for the IME concept than for the clustered concept. This result indicates that the IME design effort should concentrate on the integrated controls and health monitoring area to determine potential areas for improvement in this concept[5].

Markov Analysis

A discrete-time Markov analysis[6] with 49 states was conducted on the expander cycle IME configuration of figure 1. In this analysis phase, manifold reliability was assumed to be 1.000. Figure 5 illustrates the probability mass function of total system failure for this configuration. The probability mass function gives the point-mass distribution of the probabilistic behavior of total system failure over the IME operational time. From the figure, the expected time-to-failure is 800 seconds. By accumulating probability mass as a function of IME firing duration, system reliability curves were defined. Figure 6 presents the reliability degradation of the IME expander cycle configuration. At 800 seconds, the system reliability is 0.64, and at 1000 seconds, the system reliability falls to 0.50. If a 99% reliability for this IME configuration were demanded, the system should operate 138 seconds or less. This Markov technique assists in defining IME operational envelopes based upon demanded reliability and component failure rates.

CONCLUDING REMARKS

A study was conducted to evaluate the reliability of integrated modular engine (IME) concepts. Both expander cycle and gas generator cycle configurations were examined, and the reliability of the IME was compared to that of the non-networked, or clustered, designs. Binomial approximation and Markov techniques were used to analyze the systems. From the results the IME designs were less reliable than the clustered concepts except when the manifold reliability was high. In addition, while the expander cycle provided higher reliabilities than the gas generator cycle in the clustered configuration, the opposite was true in the IME design. Additional trade-offs showed that the ability to detect and mitigate failures is critical to the IME design, and future studies into the integrated control and health monitoring of the IME are necessary.

ACKNOWLEDGEMENTS

The authors wish to acknowledge Randall Parsley and Theresa Ward of Pratt and Whitney for their assistance in this effort.

REFERENCES

1. Cramer, J., "Application of the Integrated Modular Engine (IME) to Space Vehicle Concepts," AIAA-92-3692, 28th Joint Propulsion Conference, July 6-8, 1992.

2. Pauckert, R.; and Harmon, T., "Integrated Modular Engine for Upper Stage Propulsion," AIAA-92-3693, 28th Joint Propulsion Conference, July 6-8, 1992.

3. Burkhardt, W., "Integrated Modular Engine Concepts for Space and Upper Stage Applications," AIAA-92-3694, 28th Joint Propulsion Conference, July 6-8, 1992.

4. Parsley, R.; and Ward, T., "Integrated Modular Engine: Reliability Assessment," AIAA-92-3695, 28th Joint Propulsion Conference, July 6-8, 1992.

5. Millis, M.G., "Technology Readiness Assessment of Advanced Space Engine Integrated Controls and Health Monitoring," NASA TM 105225, Sept. 1991.

6. Dougherty, E.R., Probability and Statistics for the Engineering, Computing, and Physical Sciences, Prentice Hall, NJ, 1990.

FIGURE 1:

INTEGRATED MODULAR ENGINE (IME) SCHEMATIC DIAGRAM

EXPANDER CYCLE CONFIGURATION

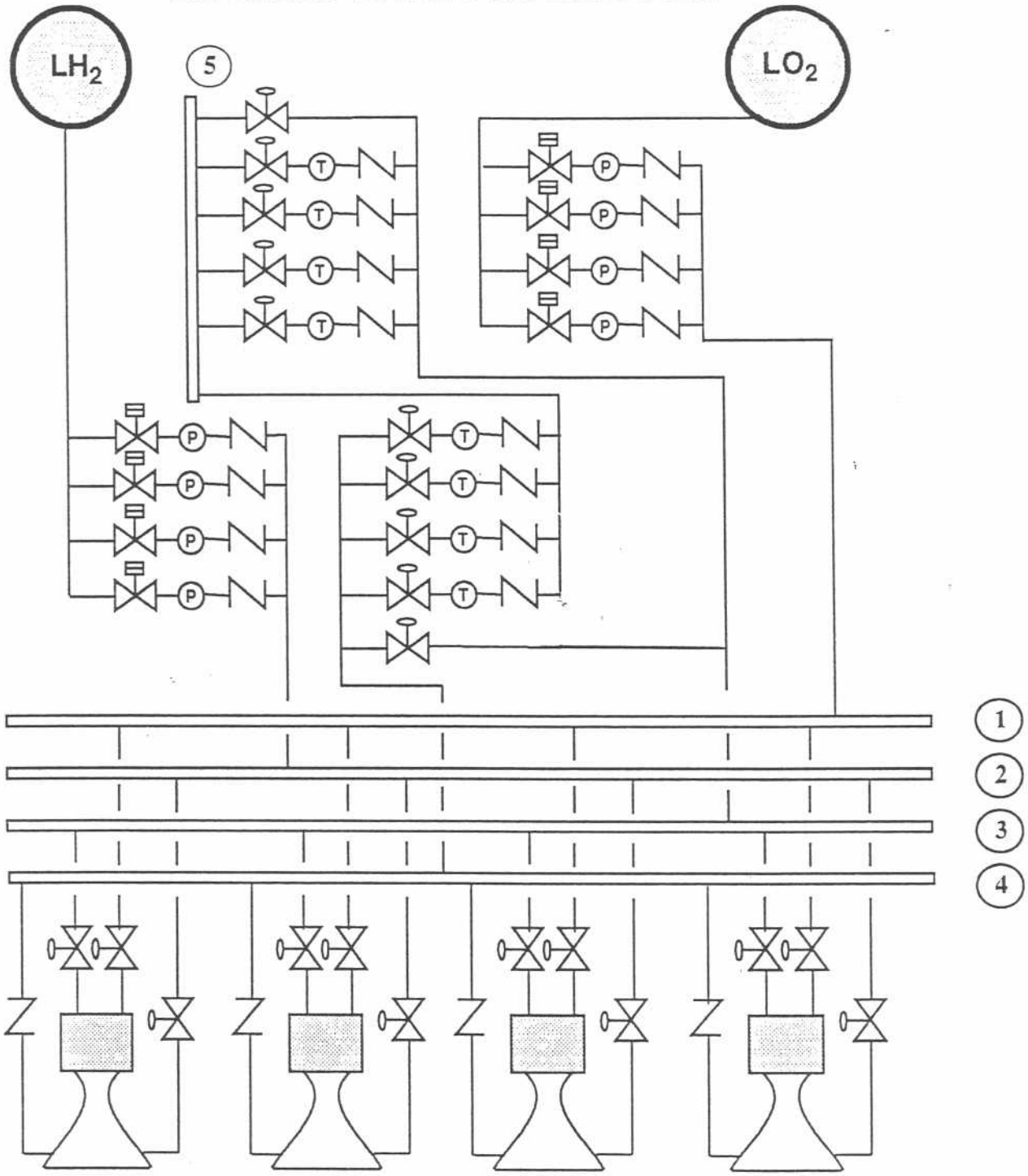

8 THRUST CHAMBERS/
VALVES TOTAL

CONTROL VALVE

SHUT-OFF VALVE

CHECK VALVE

(P) PUMP

(T) TURBINE

MANIFOLDS

(1) LOX PUMP OUTLET

(2) LH2 PUMP OUTLET

(3) LOX TURBINE OUTLET

(4) LH2 TURBINE INLET

(5) LOX TURBINE INLET

FIGURE 2:

CLUSTERED (DISCRETE) ENGINE SCHEMATIC DIAGRAM

EXPANDER CYCLE CONFIGURATION

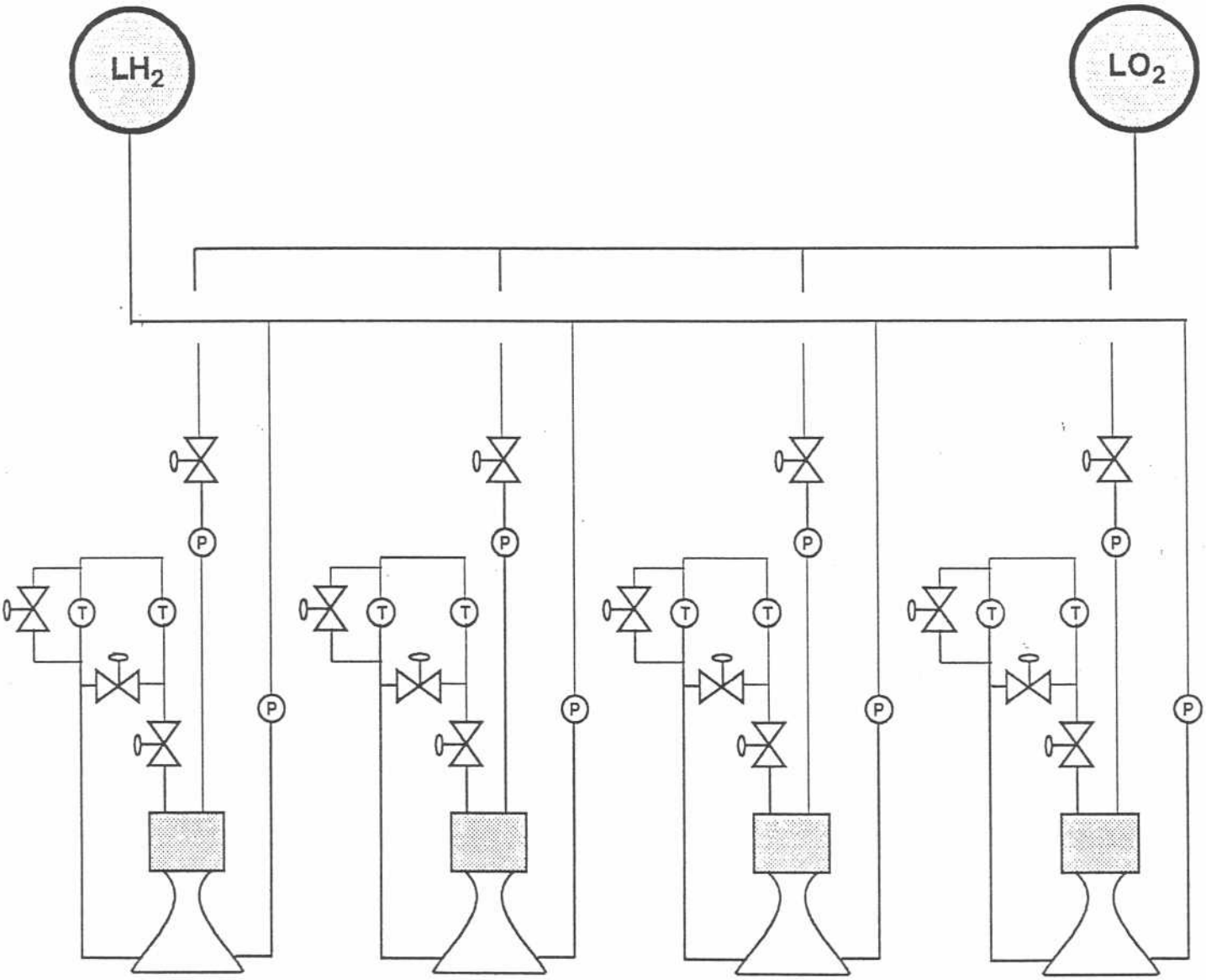

8 THRUST CHAMBERS/
TURBOPUMP ASSEMBLIES TOTAL

CONTROL VALVE

SHUT-OFF VALVE

CHECK VALVE

PUMP

TURBINE

FIGURE 3:

COMPARISON OF IME AND CLUSTERED SYSTEM RELIABILITY

EXPANDER CYCLE, ONE THRUST CHAMBER OUT, ONE TURBOPUMP OUT

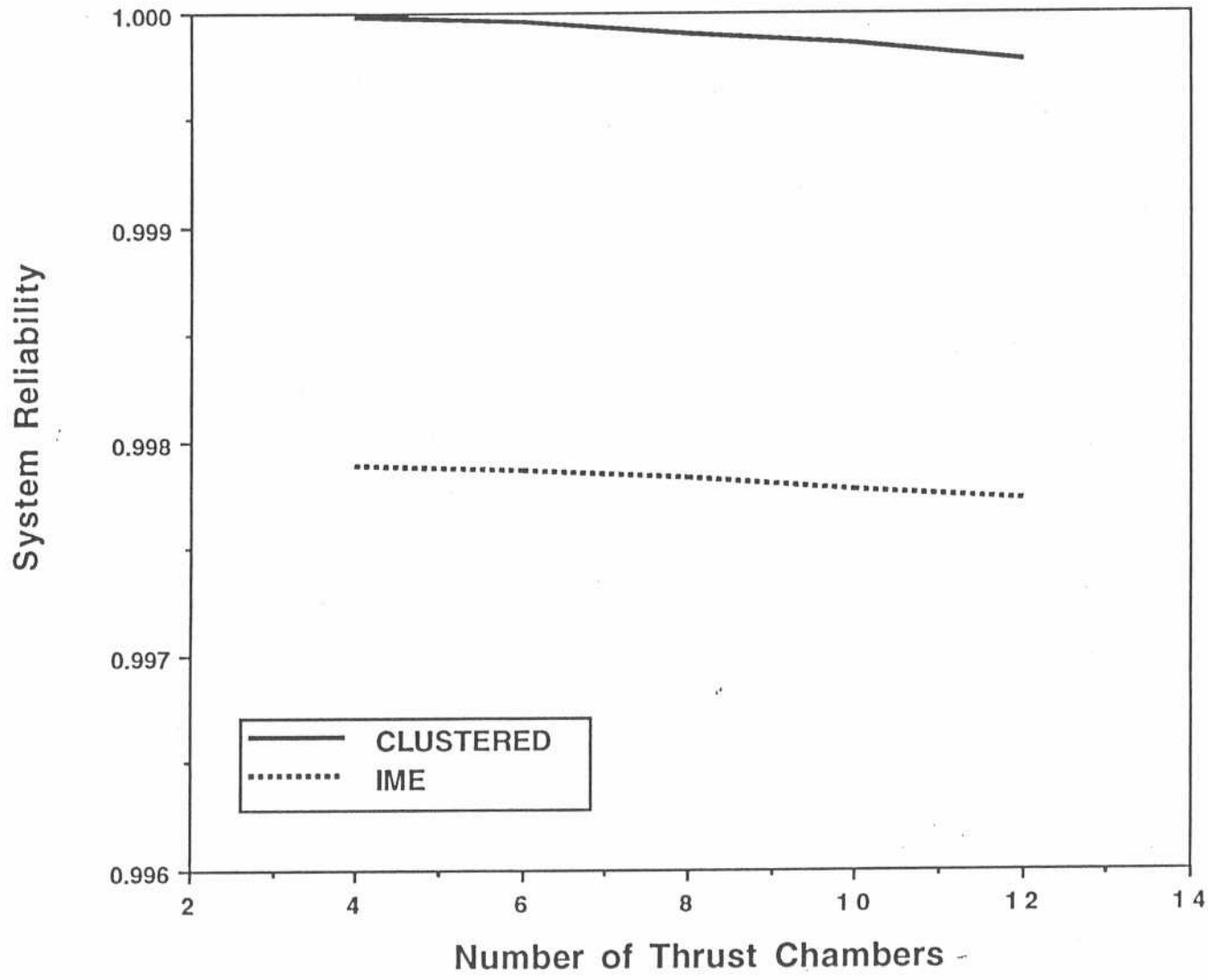

T. HARDY
8/6/92

FIGURE 4:

EFFECT OF MANIFOLD SHUTDOWN RATE ON IME SYSTEM RELIABILITY

EXPANDER CYCLE, ONE THRUST CHAMBER OUT, ONE TURBOPUMP OUT

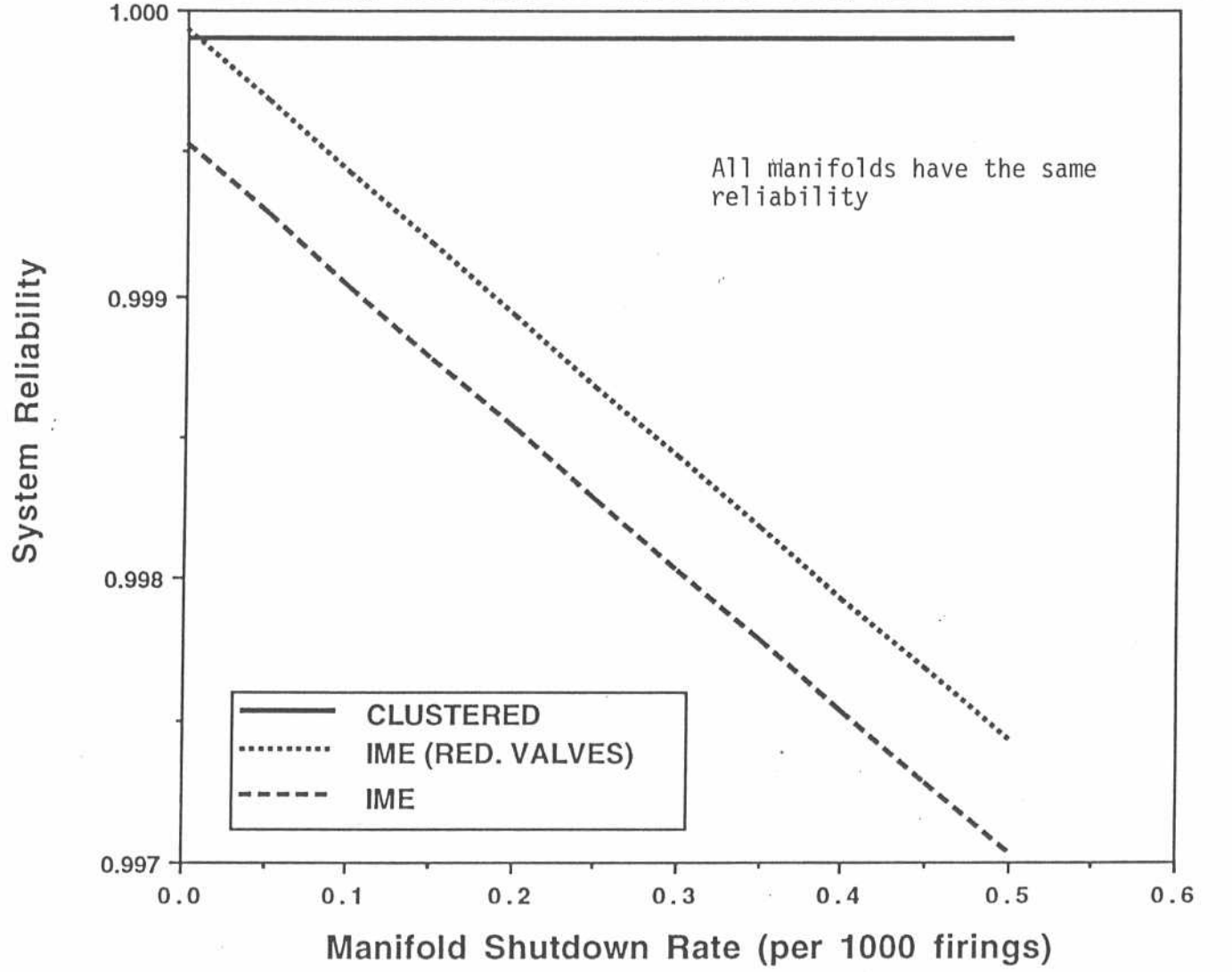

T. HARDY
8/6/92

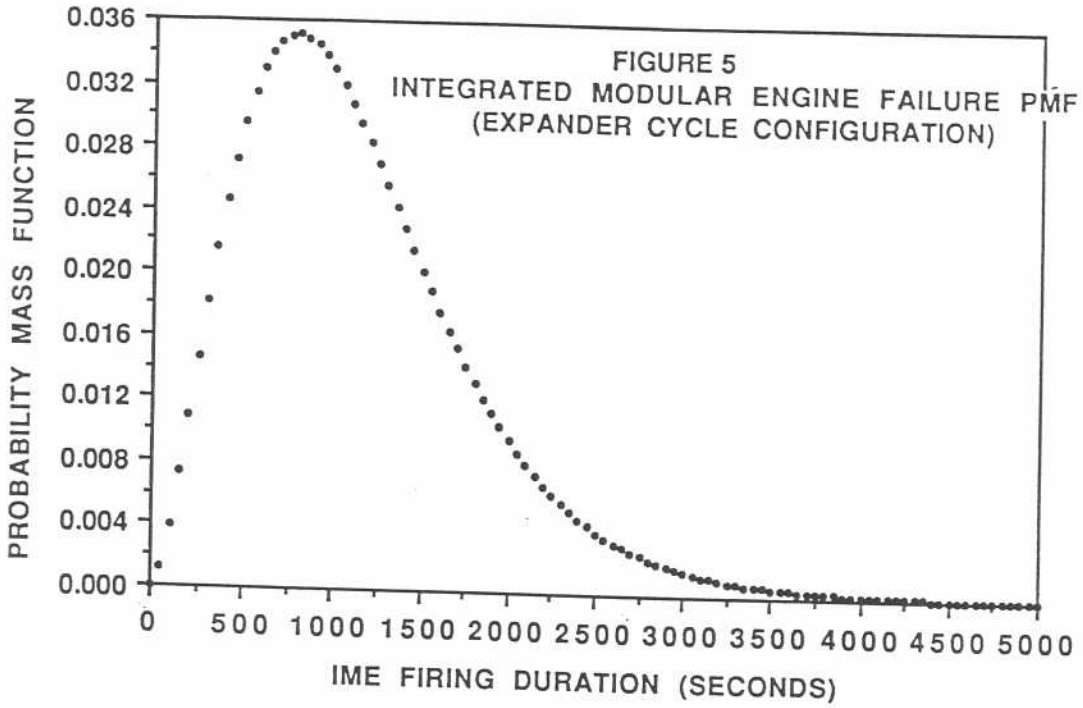
FIGURE 5
INTEGRATED MODULAR ENGINE FAILURE PMF
(EXPANDER CYCLE CONFIGURATION)
PROBABILITY MASS FUNCTION
0.036
0.032
0.028
0.024
0.020
0.016
0.012
0.008
0.004
0.000
0
500
1000
1500
2000
2500
3000
3500
4000
4500
5000
IME FIRING DURATION (SECONDS)

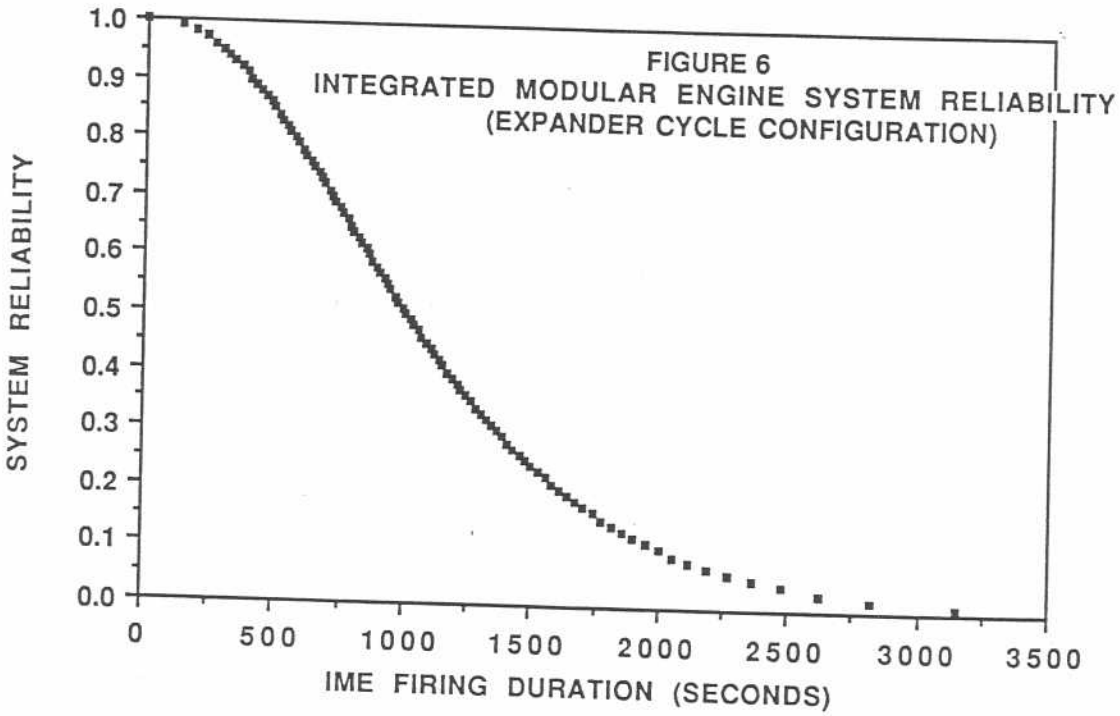
FIGURE 6
INTEGRATED MODULAR ENGINE SYSTEM RELIABILITY
(EXPANDER CYCLE CONFIGURATION)
SYSTEM RELIABILITY
1.0
0.9
0.8
0.7
0.6
0.5
0.4
0.3
0.2
0.1
0.0
0
500
1000
1500
2000
2500
3000
3500
IME FIRING DURATION (SECONDS)