Integrated Modular Engine Technology Needs

Presented by: Tim Harmon

Rockwell International Corporation
Rocketdyne Division
Canoga Park, CA

AIAA 93-1891
AIAA/SAE/ASME/ASEE
29th Joint Propulsion Conference and Exhibit
June 28-30, 1993/ Monterey, California

IME Propulsion System Designs

IME Has User-Driven Design Features

TVC by Differential Throttle

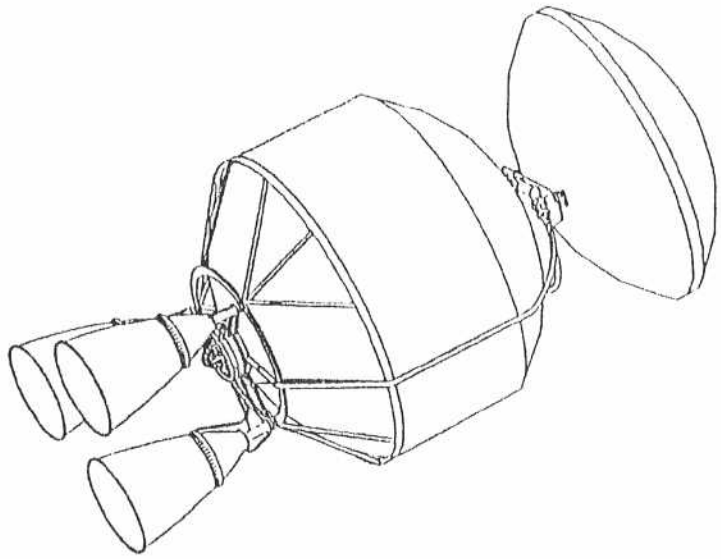

TVC by Gimbal

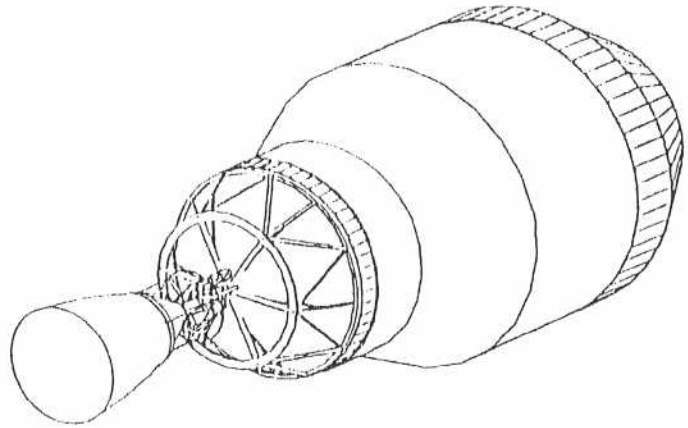

System Emphasis Maximizes Benefits and Focuses Resources

IME Program

- Design Requirements Developed Through Air Force, Aerospace and Rocketdyne Team Effort
- Flexible Modular Engine Design Evolved Using QFD Process
  - Rapid Prototyping
  - Simple Engine With Few Interfaces
  - Low Production Costs
  - High Design Margin, High Performance
  - Minimize Launch Operations
- Programmatic Risks Minimized
  - Concurrent Engineering
  - Short Development Program
  - Facilities Exist
  - Technology Base Exist Now
  - Evolving Technologies Incorporated As They Mature

IME Propulsion System Characteristics

Features

- Two Fluid System LOX/LH_2
- Expander Fuel Side
- Oxygen-Rich Preburner Oxidizer Side
- All Welded Design Minimizes Leaks
- No Purges/Hypergolics, Pneumatics, Hydraulics, Helium, Gimbal System
- TVC by Differential Throttling
- EMA Valves
- Propellant Tanks Pressurized with GOX and GH_2 from Propulsion System
- GOX/GH_2 RCS System
- Pump
- Preconditioning when Propellants are Loaded
  (Tank Mounted Pump Option)

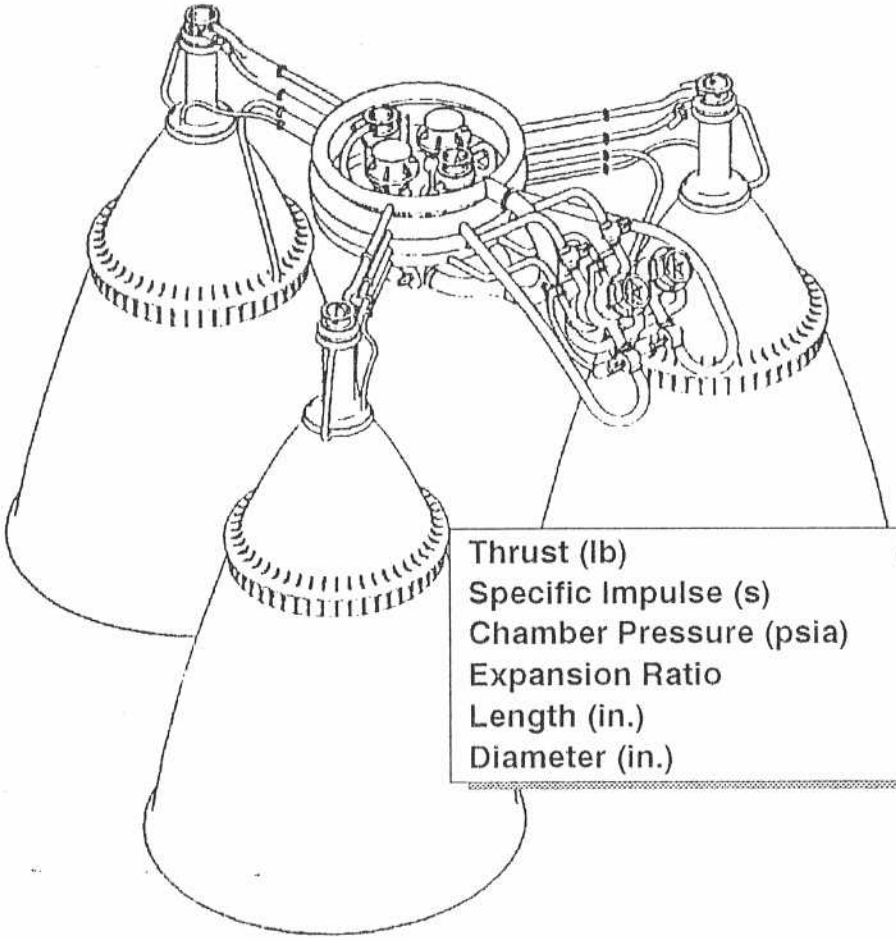

Thrust (lb)	30,000
Specific Impulse (s)	480
Chamber Pressure (psia)	1,746
Expansion Ratio	700:1
Length (in.)	87.7
Diameter (in.)	136

Rockwell International
Rocketdyne Division

System Emphasis Maximizes Benefits and Focuses Resources

IME Program Customer Wants (Requirements)

Affinitized Requirements	Customer Requirements
Safety and reliability	Safety Reliability
Confidence in propulsion system design	High confidence in engine ignition Performance values correspond with test/ analysis Cell/module out capability assessed High confidence of TVC capability High confidence in operability
Design to cost	Design margin for lower cost Low nonrecurring cost Low recurring cost

IME Program Customer Wants (Requirements) (continued)

Affinitized Requirements	Customer Requirements
Performance requirements engine characteristics	Specific impulse higher than 446 s Compatible with advanced upper stage envelope Wide tolerance of propellant quality Limit axial acceleration to 7 g's Engine off-design start and operation Repetitive shutdown impulse Burn time (TBD) 20,000- to 40,000-lb thrust (TBD) 3-deg/s pitching rate capability
Operability	Three in-flight starts (including suborbital) Meets launch responsiveness requirement Minimum launch process effort Easy accessibility Engine and component interchange Multiple National Launch System use

IME Program Hows (Design Strategies)

Affinitized Design Strategies	Rocketdyne Design Strategies
Ability to meet or exceed minimum needs	Minimum engine weight Minimum NPSH High specific impulse Minimum envelope Minimum chilldown time Throttling Start time
Reasonable operating parameters	Low turbine inlet temperature Low pump discharge pressure Low fuel pump speed
Fewer parts	Minimum interconnects Minimum number of fluids Minimum components Minimum piece count
Fewer controls	Health assurance Redundancy (fault tolerance)

IME Program Hows (Design Strategies) (continued)

Affinitized Design Strategies	Rocketdyne Design Strategies
Design margin	Life Thrust upgrade capability Component size limits
Manufacturing operation	Minimum number of assembly steps Minimum manufacturing steps Minimum manufacturing facility complexity
Functional effectiveness	Pitching rate TVC angle Minimum maintenance preparation steps Minimum non-main stage impulse
Technical risk	Technology maturity Low cost of materials Minimum development time Performance data uncertainty

Component/Subsystem Benefits

Component/ Subsystem	Benefit	Technology
Turbopumps	Tank pressurization system eliminated Chilldown eliminated Reliability, cost Preflight physical checks eliminated Purge eliminated	Zero NPSH Very low parts count Hydrostatic bearings GO_2 driven oxidizer turbopump (OTP) turbine
Injector	Low cost, rapid prototype	Laser drilled
Combustor	Low cost, rapid prototype Long life, high margin, reliability Gimbal/actuator system eliminated Wraparound flex ducts eliminated Preflight physical checks eliminated Improved reliability	Stereolithography Conformal channels Throttling for TVC Laser ignition
Precombustor	OTP drive eliminates purge Enables GO_2/GH_2 RCS—eliminates additional hypergolic propellants Facilitates injector throttling for TVC Potential for higher performance Facilitates tank-mounted OTP to eliminate prechill	GO_2-rich
Valves	Hydraulic system eliminated	Electromechanical actuators

Component/Subsystem Technology Demonstrations

Component/Subsystem	Demonstrate	Special Facility Provisions
EMA valves	Response Repeatability Cryo compatibility Power requirement Weight	Cryo propellants
Precombustor	Durability, performance Stability	High-pressure LO_2, GH_2
Oxidizer turbopump	Durability, performance GO_2 compatibility Operating range Zero NPSH	High-pressure ambient or warm GO_2 Low-pressure LO_2
Fuel turbopump	Durability, performance Operating range Zero NPSH	High-pressure ambient or warm GHe Low-pressure LH_2
Thrust chamber assembly	Fabricability Ignition, start, shutdown Durability, performance	High-pressure ambient or warm GO_2 and GH_2 Vacuum optional
Controller, instrumentation, software	Durability, performance Accuracy	Simulators for controlled components and propulsion system

Technology Areas versus "Minimum" Design Strategies

Advanced materials and processes	Minimum piece count Minimum number of assembly steps Minimum manufacturing steps Minimum manufacturing facility complexity Minimum interconnects Minimum components
Turbomachinery technology	Minimum number of fluids Minimum chilldown time Minimum NPSH
Oxygen-rich preburner	Minimum maintenance preparation steps Minimum engine weight Minimum envelope
Controls	Minimum development time

Conclusions

- Key technology areas identified:
  - Advanced materials & processes
  - Turbomachinery technology
  - Oxygen-rich preburner
  - Controls
- Applying advanced technologies provides:
  - Reduced weight
  - Reduced development & recurring costs
  - Improved performance & reliability
  - Improved operability

These key technologies would enable the development of a multiple mission propulsion system applicable to upper stages, space-based, transfer, and lander missions

IME Propulsion System Designs

IME Has User-Driven Design Features

TVC by Differential Throttle

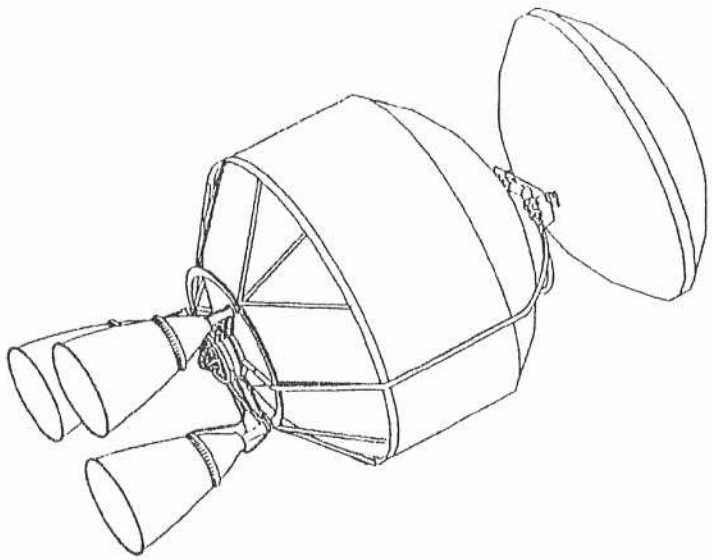

TVC by Gimbal

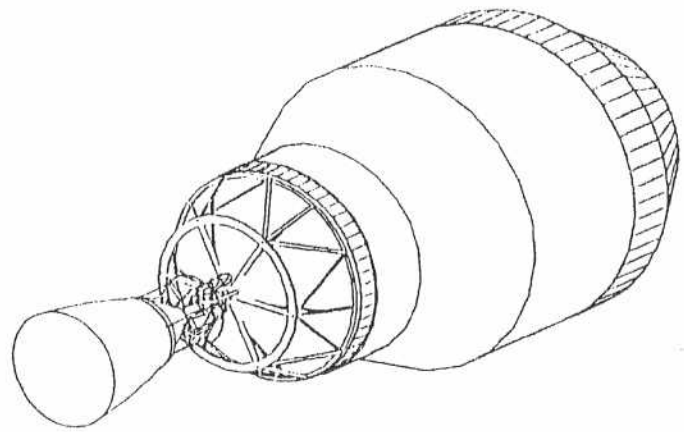

System Emphasis Maximizes Benefits and Focuses Resources

System/Subsystem Interdependence

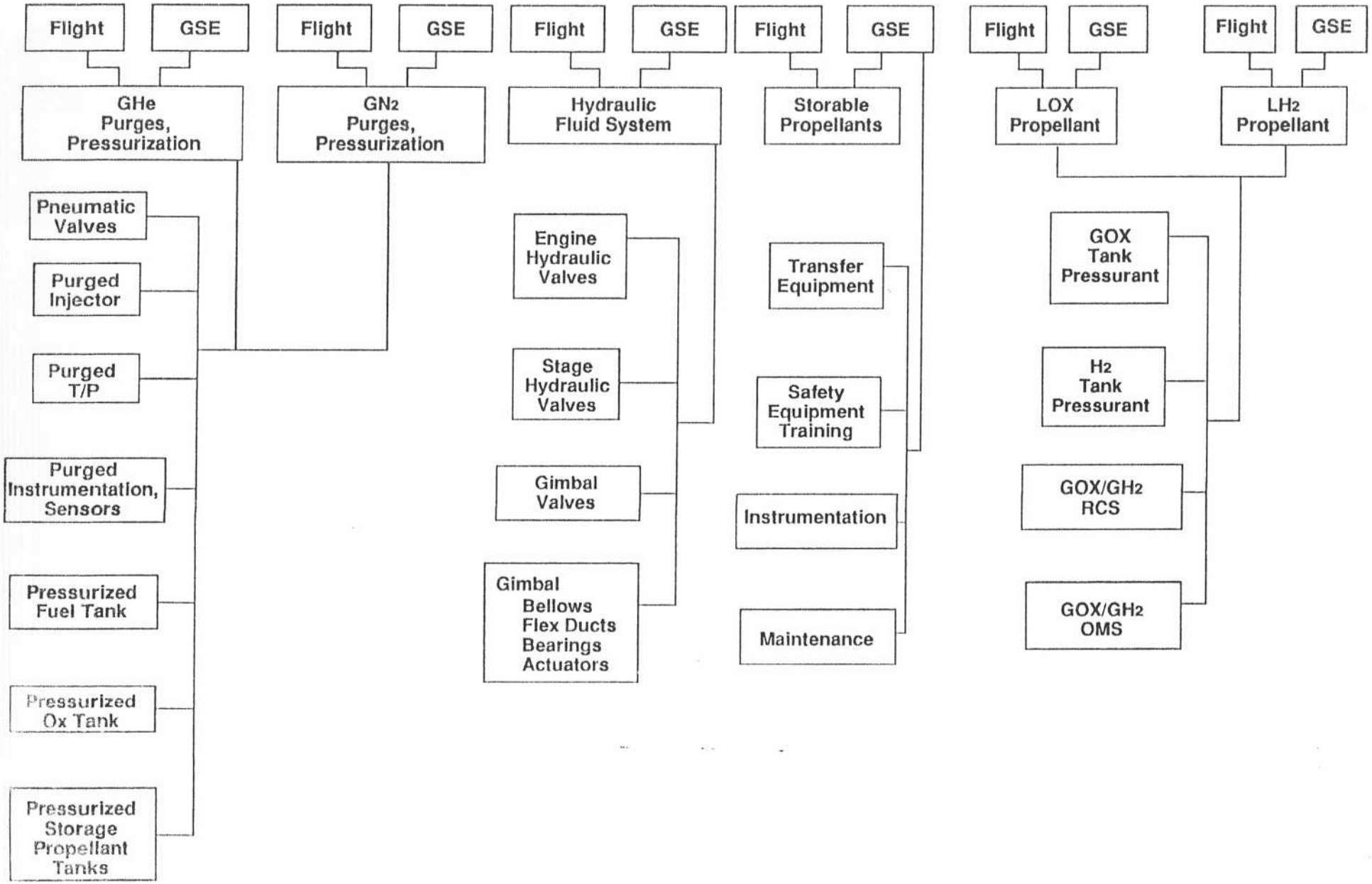

System/Subsystem Interdependence

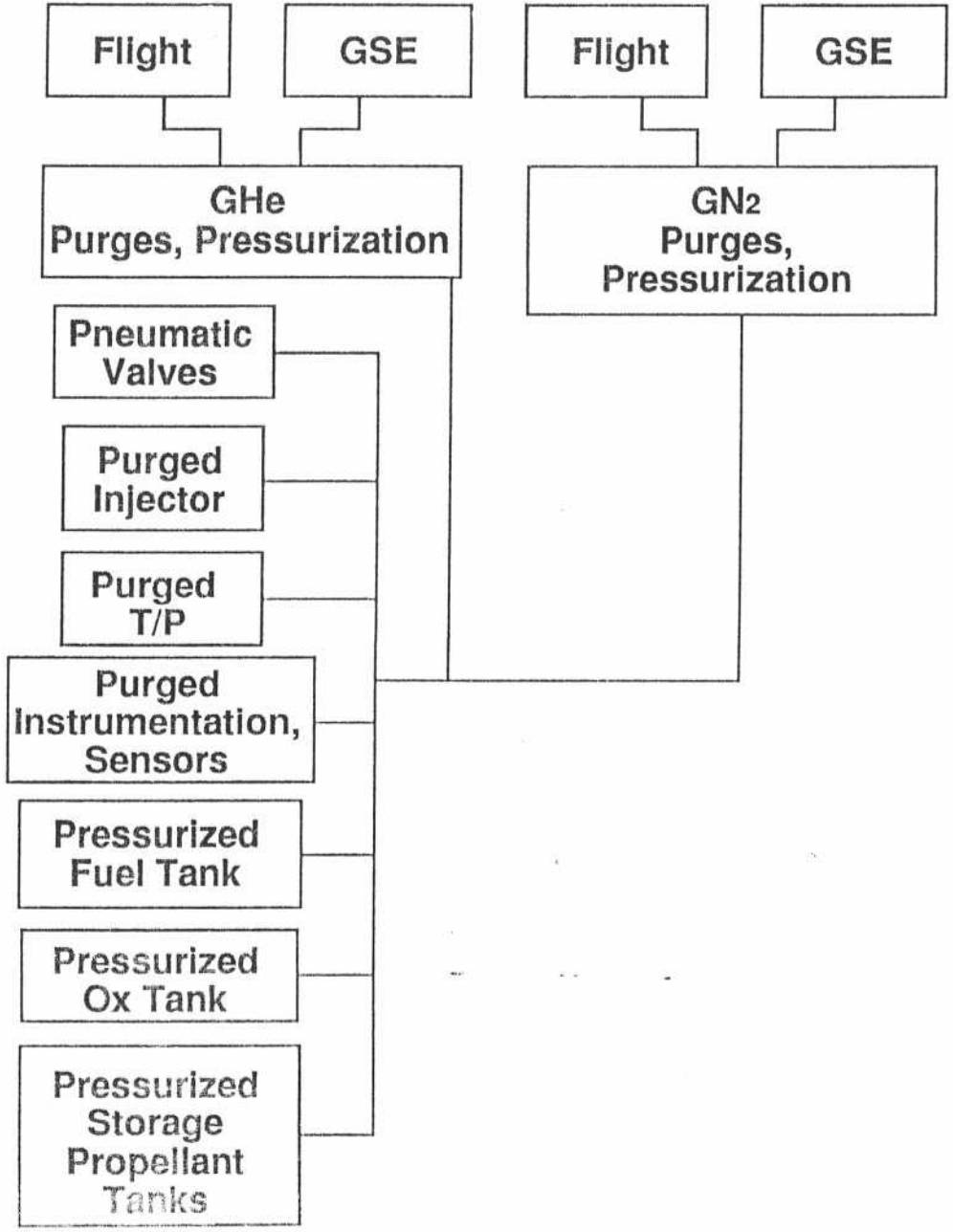

System/Subsystem Interdependence

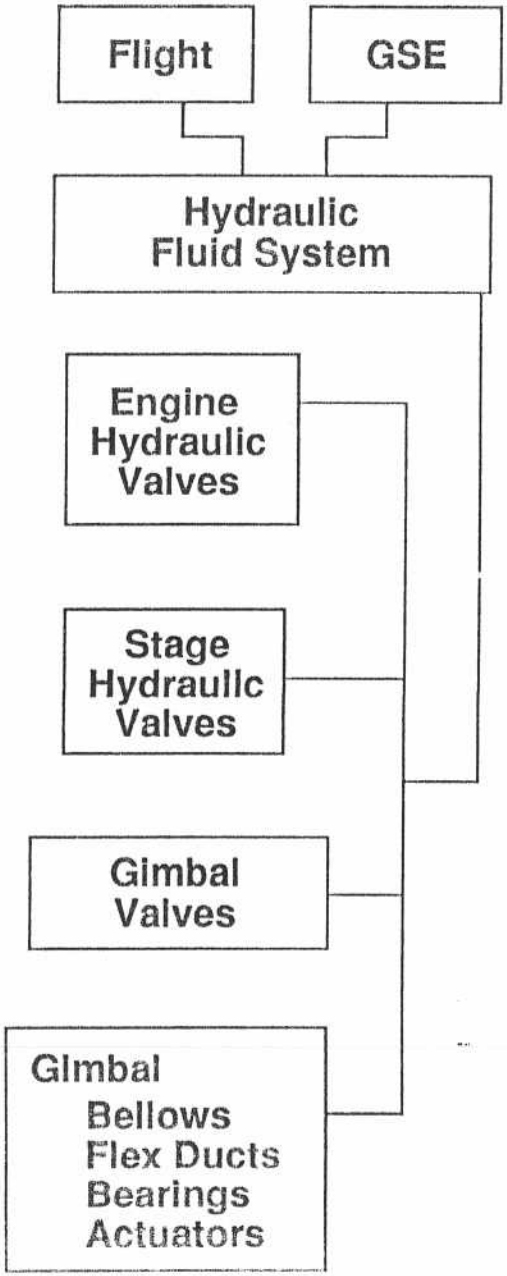

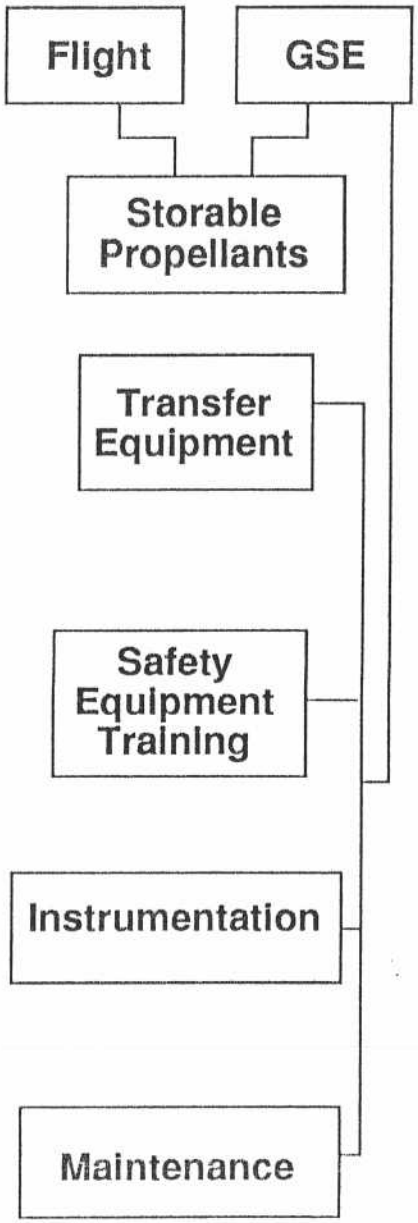
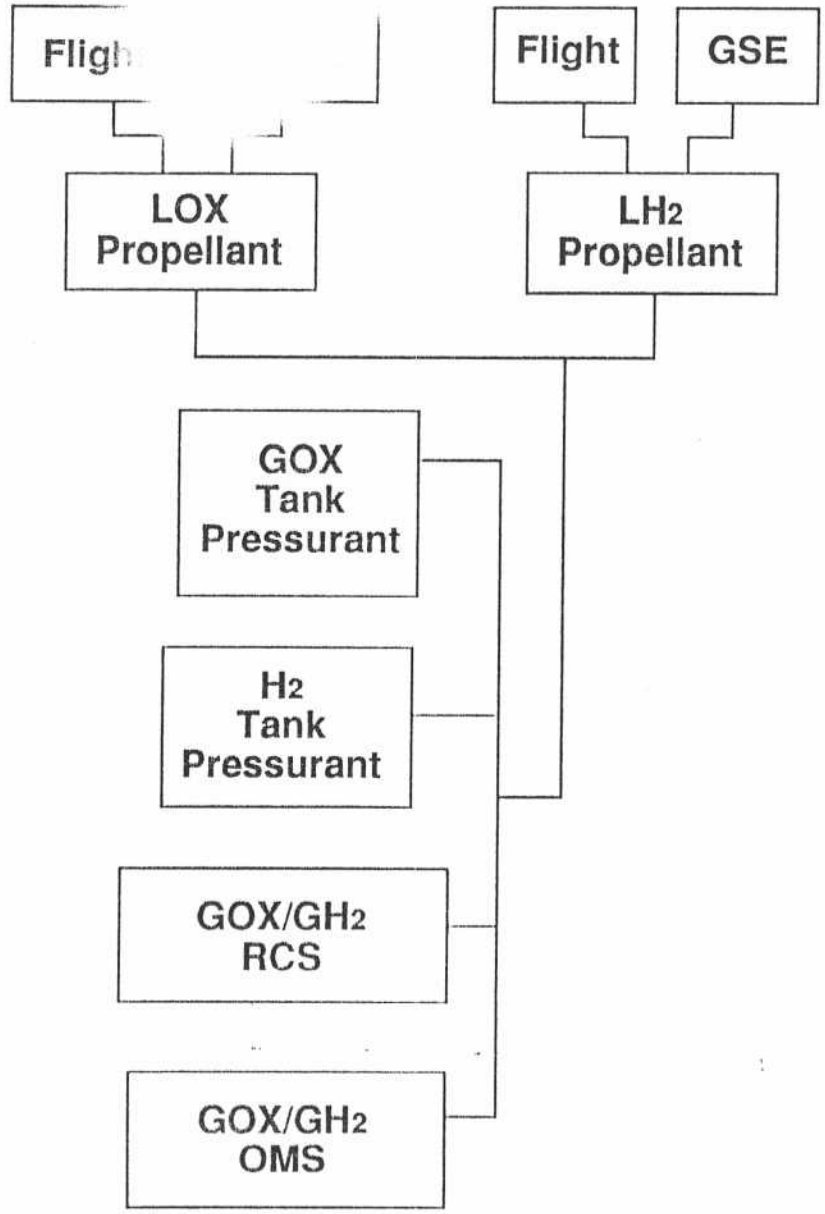
System/Subs m Interdependence